Contact temperature sensor

Surface contact temperature sensor for pipe applications. Spring loaded brass contact pin to ensure fast response and accurate reading.

Type Overview

Type	Output signal passive temperature
01HT-1A	Pt100
01HT-1B	Pt1000
01HT-1C	Ni1000
01HT-1D	Ni1000TK5000
01HT-1F	NTC1k8
01HT-1L	NTC10k (10k2)
01HT-1Q	NTC20k

Technical data

Electrical data	Electrical connection	Pluggable spring loaded terminal block max. 2.5 mm²
	Cable entry	Cable gland with strain relief ø6...8 mm
Functional data	Medium	Water
Measuring data	Measured values	Temperature
Specification temperature active	Time constant τ (63%) on water pipe	With thermal contact fluid Typical 16 s
Specification temperature passive	Measuring range	-35...90°C [-30...195°F]
	Measuring current	Pt100: <1 mA @ 0°C [32°F] Pt1000: <0.3 mA @ 0°C [32°F] Ni1000: <0.3 mA @ 0°C [32°F] Ni1000TK5000: <0.3 mA @ 0°C [32°F] NTC1k8: <0.1 mA @ 25°C [77°F] NTC10k (10k2): <2 mA @ 25°C [77°F] NTC20k: <0.5 mA @ 25°C [77°F]
	Accuracy temperature	Passive sensors depending on used type Pt.. : Class B, ±0.3°C @ 0°C [±0.5°F @ 32°F] Ni.. : ±0.4°C @ 0°C [±0.7°F @ 32°F] NTC1k8 : ±0.5°C @ 25°C [±0.9°F @ 77°F] NTC.. : ±0.2°C @ 25°C [±0.35°F @ 77°F]
	Time constant τ (63%) on water pipe	With thermal contact fluid Typical 16 s
Safety data	Protection class IEC/EN	III, Protective Extra-Low Voltage (PELV)
	Power source UL	Class 2 Supply
	Degree of protection IEC/EN	IP54

Technical data

Safety data	Degree of protection NEMA/UL	NEMA 1
	Housing	UL Enclosure Type 1
	EU Conformity	CE Marking
	Certification IEC/EN	IEC/EN 60730-1
	Quality Standard	ISO 9001
	UL Approval	cULus acc. to UL60730-1A/-2-9, CAN/CSA E60730-1/-2-9
	Type of action	Type 1
	Rated impulse voltage supply	0.8 kV
	Method of mounting control	Surface mounted
	Pollution degree	2
	Ambient humidity	Max. 95% RH, non-condensing
	Ambient temperature	-35...50°C [-30...120°F]
	Fluid temperature	-35...90°C [-30...195°F]
	Housing surface temperature	Max. 90°C [195°F]
Materials	Housing	Cover: PC, orange Bottom: PC, orange Seal: NBR70, black UV resistant
	Cable gland	PA6, black

Safety notes

This device has been designed for use in stationary heating, ventilation and air-conditioning systems and must not be used outside the specified field of application. Unauthorised modifications are prohibited. The product must not be used in relation with any equipment that in case of a failure may threaten humans, animals or assets.

Ensure all power is disconnected before installing. Do not connect to live/operating equipment.

Only authorised specialists may carry out installation. All applicable legal or institutional installation regulations must be complied with during installation.

The device contains electrical and electronic components and must not be disposed of as household refuse. All locally valid regulations and requirements must be observed.

Remarks

General remarks concerning sensors

Due to self-heating with 2 wire passive sensors, the supply wire current affects the measurement accuracy. So the supply current should not be higher than the measuring current values specified in this data sheet.

When using lengthy connecting cables (depending on the cross section used), the cable resistance must be taken into account. The lower the impedance of the sensor used, the greater the effect of the line resistance on the measurement, because it generates an offset.

Remark surface measurements

When measuring temperature, humidity or condensation on a surface, both the temperature of the surface and that of the ambient air influence the measurement result. When measuring on a pipe surface, the influence of the ambient air can be minimised by using thermal contact fluid.

Parts included

Description	Type
Fixing strap, for pipes ø20...110 mm [0.8...4.3"]	A-22P-A47

Accessories

Optional accessories	Description	Type
	Fixing strap, for pipes ø20...250 mm [0.8...9.8"]	A-22P-A49
	Thermal contact fluid	A-22P-A44
	Connection adapter flex conduit, M20x1.5, for cable gland 1x 6 mm, Multipack 10 pcs.	A-22G-A01.1

Wiring diagram

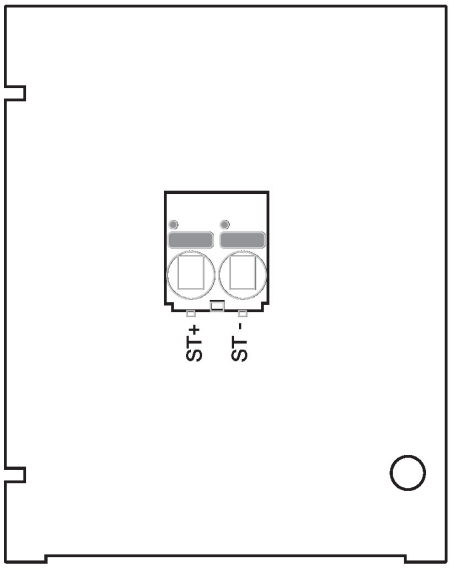

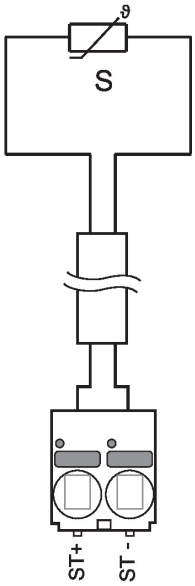

Dimensions

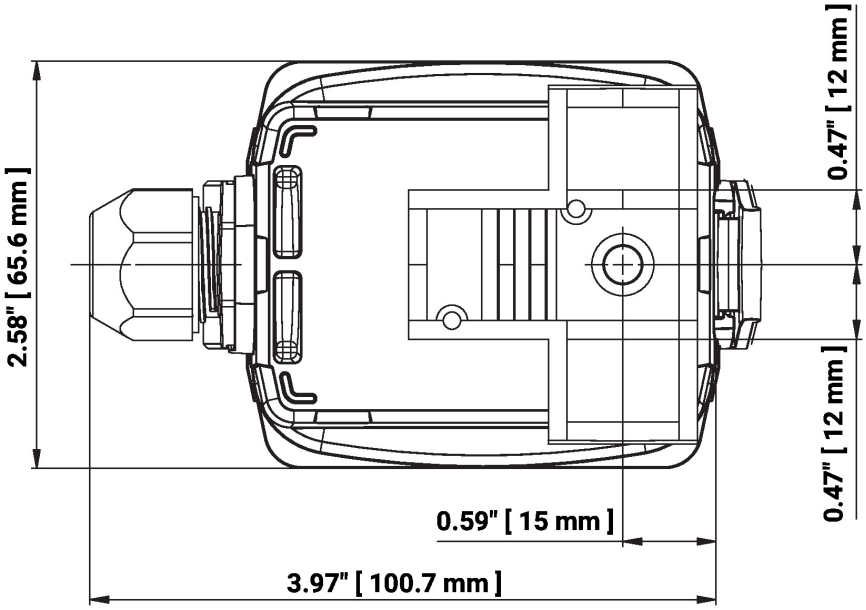

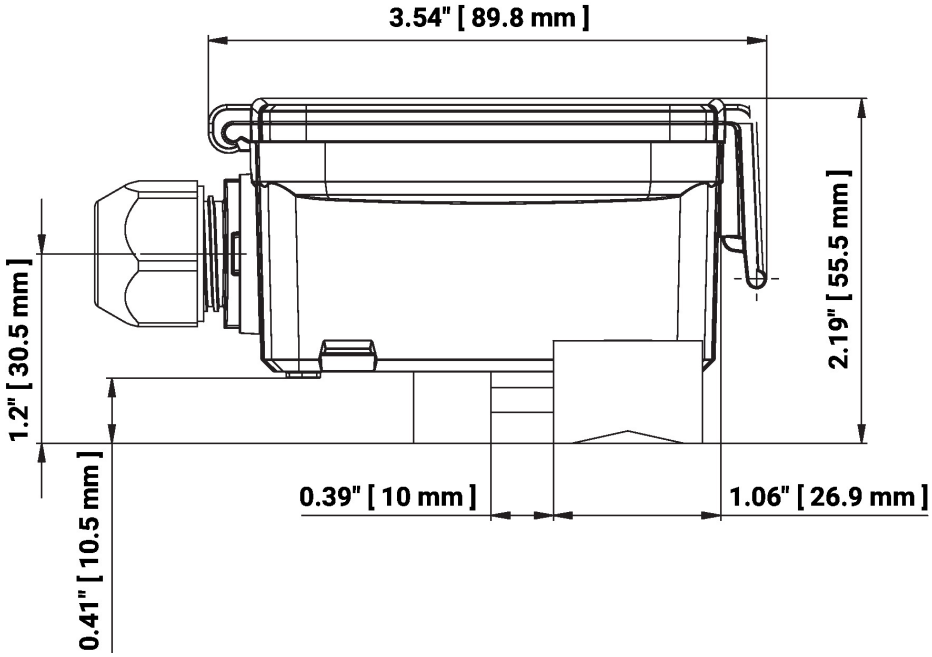

Type	Weight
01HT-1A	0.15 kg
01HT-1B	0.15 kg
01HT-1C	0.15 kg
01HT-1D	0.15 kg
01HT-1F	0.12 kg
01HT-1L	0.15 kg
01HT-1Q	0.15 kg

Further documentation

- Installation instructions
- Resistance characteristics