Rotary actuator fail-safe in the IP66/67 protective housing for adjusting dampers in HVAC plants, comparable industrial plants and technical building installations

- Air damper size up to approx. 4 m²
- Torque motor 20 Nm
- Nominal voltage AC 24...240 V / DC 24...125 V
- Control Open/close
- Optimum weather protection for use outdoors

Picture may differ from product

Technical data

Electrical data	Nominal voltage	AC 24...240 V / DC 24...125 V
	Nominal voltage frequency	50/60 Hz
	Nominal voltage range	AC 19.2...264 V / DC 21.6...137.5 V
	Power consumption in operation	7 W
	Power consumption in rest position	3.5 W
	Power consumption for wire sizing	18 VA
	Connection supply / control	Cable 1 m, 2x 0.75 mm² (halogen-free)
	Parallel operation	Yes (note the performance data)
Functional data	Torque motor	20 Nm
	Torque fail-safe	20 Nm
	Direction of motion fail-safe	L (ccw)
	Manual override	by means of hand crank and locking switch
	Angle of rotation	Max. 95°
	Angle of rotation note	adjustable starting at 33% in 2.5% steps (with mechanical end stop)
	Running time motor	75 s / 90°
	Running time fail-safe	<20 s @ -20...50°C, <60 s @ -30°C
	Sound power level, motor	45 dB(A)
	Mechanical interface	Universal shaft clamp 12...26.7 mm
	Position indication	Mechanical, pluggable
	Service life	Min. 60'000 fail-safe positions
Safety data	Protection class IEC/EN	II, reinforced insulation
	Protection class UL	II, reinforced insulation
	Degree of protection IEC/EN	IP66/67
	Degree of protection NEMA/UL	NEMA 4X
	Housing	UL Enclosure Type 4X
	EMC	CE according to 2014/30/EU
	Low voltage directive	CE according to 2014/35/EU
	Certification IEC/EN	IEC/EN 60730-1 and IEC/EN 60730-2-14
	UL Approval	cULus according to UL60730-1A, UL60730-2-14 and CAN/CSA E60730-1 The UL marking on the actuator depends on the production site, the device is UL-compliant in any case
	Type of action	Type 1.AA

Technical data

Safety data	Rated impulse voltage supply / control	4 kV
	Pollution degree	4
	Ambient humidity	Max. 100% RH
	Ambient temperature	-30...50°C [-22...122°F]
	Storage temperature	-40...80°C [-40...176°F]
	Servicing	maintenance-free
Weight	Weight	4.4 kg

Safety notes

- This device has been designed for use in stationary heating, ventilation and air-conditioning systems and must not be used outside the specified field of application, especially in aircraft or in any other airborne means of transport.
- Caution: Mains voltage!
- Only authorised specialists may carry out installation. All applicable legal or institutional installation regulations must be complied with during installation.
- Junction boxes must at least correspond with housing IP degree of protection!
- The cover of the protective housing may be opened for adjustment and servicing. When it is closed afterwards, the housing must seal tight (see installation instructions).
- The device may only be opened at the manufacturer's site. It does not contain any parts that can be replaced or repaired by the user.
- The cables must not be removed from the device installed in the interior.
- To calculate the torque required, the specifications supplied by the damper manufacturers concerning the cross-section and the design, as well as the installation situation and the ventilation conditions must be observed.
- The device contains electrical and electronic components and must not be disposed of as household refuse. All locally valid regulations and requirements must be observed.
- The device is not designed for applications where chemical influences (gases, fluids) are present or for utilisation in corrosive environments in general.
- The actuator may not be used in plenary applications (e.g. suspended ceilings or raised floors).
- The materials used may be subject to external influences (temperature, pressure, construction fastening, effect of chemical substances, etc.), which cannot be simulated in laboratory tests or field trials. In case of doubt, we definitely recommend that you carry out a test. This information does not imply any legal entitlement. Belimo will not be held liable and will provide no warranty.
- Flexible metallic cable conduits or threaded cable conduits of equal value are to be used for UL (NEMA) Type 4X applications.
- When used under high UV loads, e.g. extreme sunlight, the use of flexible metallic or equivalent cable conduits is recommended.

Product features

Fields of application

The actuator is particularly suitable for utilisation in outdoor applications and is protected against the following weather conditions:
- UV radiation
- Rain / Snow
- Dirt / Dust
- Air humidity

Operating mode

The actuator is equipped with a universal power supply module that can utilise supply voltages of AC 24...240 V and DC 24...125V.

The actuator moves the damper to the operating position at the same time as tensioning the return spring. The damper is turned back to the fail-safe position by spring force when the supply voltage is interrupted.

Product features

Simple direct mounting
Simple direct mounting on the damper shaft with a universal shaft clamp, supplied with an anti-rotation mechanism to prevent the actuator from rotating.

Manual override
By using the hand crank the damper can be actuated manually and engaged with the locking switch at any position. Unlocking is carried out manually or automatically by applying the operating voltage.

The housing cover must be removed for manual override.

Adjustable angle of rotation
Adjustable angle of rotation with mechanical end stops.

High functional reliability
The actuator is overload protected, requires no limit switches and automatically stops when the end stop is reached.

Flexible signalling
If a combination with the following electrical accessories is required, please contact your Belimo representative!

S2A-F Auxiliary switch 2 x SPDT

P200A-F Feedback potentiometer 200 Ω

P1000A-F Feedback potentiometer 1 kΩ

Accessories

Mechanical accessories

Description	Type
Cable gland for cable diameter ø4...10 mm	Z-KB-PG11

Electrical installation

Caution: Mains voltage!

Parallel connection of other actuators possible. Observe the performance data.

Wire colours:
1 = blue
2 = brown

AC 24...240 V / DC 24...125 V, open/close

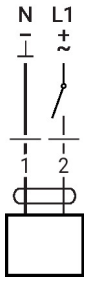

Dimensions

Spindle length

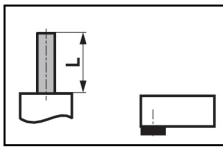	-
	16...105 (ø12...19) 16...45 (ø19...26.7)

Clamping range

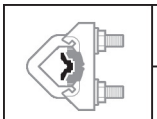		
	12...22	12...18
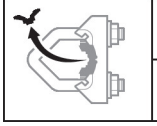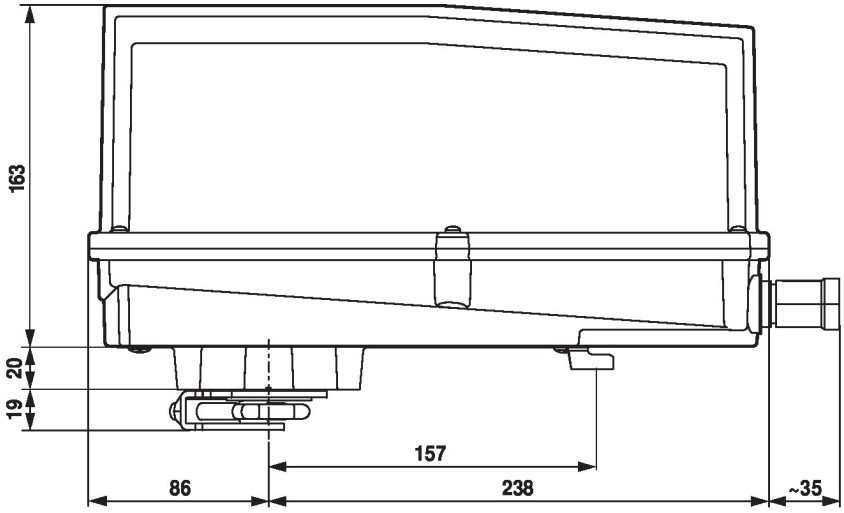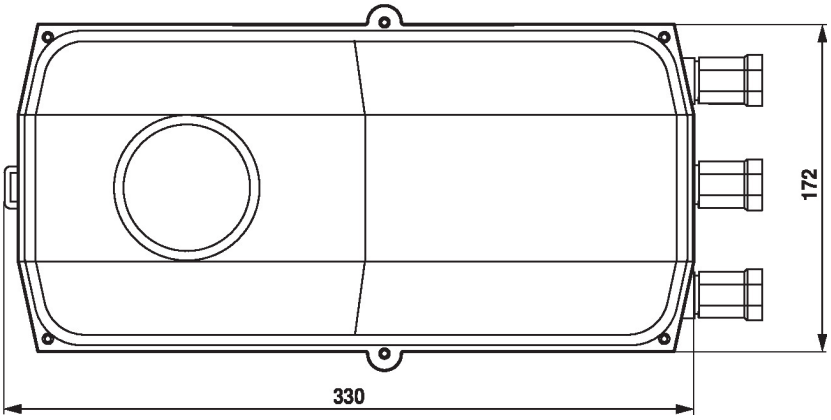		
	22...26.7	12...18