Bluetooth® to NFC converter for temporary wireless operation of Belimo devices with an NFC interface.
E.g., with the Smartphone Assistant App.

Technical Data

Energy supply	Battery	Not interchangeable, 450 mAh
	Charging input	Micro USB 2.0 type B
	Typical charge duration	~ 2 h when using a 5 W charger
Interfaces	Bluetooth 4.0 Low Energy (BLE)	
	NFC – Near Field Communication	For Belimo devices with an NFC interface
Operating mode	Point-to-point	With deenergised or operational (energised) Belimo devices
Range	Max. approx. 5 metres	Depending on surroundings
Mounting	Temporary attachment on Belimo device	Suction cup film on rear
Operation	Smartphone with Belimo App	E.g.: Belimo Assistant App
Safety / standards	Device class	Protection class III
	Electrical safety	IEC 62368-1 IEC 60950-1 IEC 60529
	Electromagnetic compatibility and Radio spectrum Matters	EN 302 489-1/ EN 302 489-3/EN 301 489-17 EN 302 291-1/EN 302 291-2 EN 62479 EN 200328 FCC Part 15 Subpart B FCC Part 15 Subpart C RSS Gen RSS-210 MPE Calculation ANSI C95.1 and RSS-102
	Battery	IEC 62133; UN38.3; UL 1642
	Environment and disposal	RoHS directives EN 50581:2012 China RoHS
	Degree of protection	IP20
	Operating temperature	0…50°C, non-condensing
	Non-operating temperature	-20…85°C, non-condensing
Dimensions / weight	Dimensions	L x W x D: 70 x 46 x 19 mm
	Weight	50 g
Maintenance	Occasional cleaning of the suction film, see page 3	

Safety notes

- **The device must not be used outside the specified field of application, especially not in aircraft or in any other airborne means of transport.**
- **Only authorised specialists may perform usage. All applicable legal and government agency regulations must be complied with during use.**
- **The device may be opened only at the manufacturer's plant. It does not contain any parts that can be replaced or repaired by the user.**
- **Transport in aircraft: The ZIP-BT-NFC must be switched off using the power switch.**
- **Battery-operated devices must not be subjected to excessive heat, e.g.: Direct sunshine.**

Note for battery disposal

- **Dispose internal battery not into fire or a hot oven.**
- **Mechanically crushing or cutting of a battery can result in an explosion.**
- **Dispose the battery according to the national regulatory."**

Spanish

- **No tire la batería interna al fuego o a un horno caliente.**
- **Triturar mecánicamente o cortar una batería podría provocar una explosión.**
- **Deseche la batería conforme lo estipulado en las leyes nacionales vigentes.**

Portuguese

- **Não eliminar a bateria interna no fogo nem em fornos quentes.**
- **Triturar mecanicamente ou cortar baterias pode resultar em explosões.**
- **Eliminar a bateria de acordo com os regulamentos nacionais.**

Serbian

- **Nemojte odlagati internu bateriju u vatru ili u zagrejanu rernu.**
- **Mehaničko drobljenje ili sečenje baterije može dovesti do eksplozije.**
- **Odložite bateriju u skladu s državnim propisima.**

Korean

- 내장 배터리를 불이나 뜨거운 오븐에 넣지 마십시오
- 배터리를 기계로 압착하거나 절단할 경우 폭발할 수 있습니다.
- 배터리를 국가에서 정한 규정에 따라 폐기하십시오.

Limitations of use

The ZIP-BT-NFC must not be used in areas where the use of wireless transmitters is prohibited.
The ZIP-BT-NFC is designed only for temporary in-house use

Electromagnetic compatibility

This product satisfies all standards and regulations relating to operation in the defined field of application.

NFC-capable Belimo devices

For up-to-date information about the NFC capability of Belimo devices, see: www.belimo.com

Belimo Smartphone Apps

Available from the official App stores:

Available on the App Store

GET IT ON Google play

Android Smartphones: Available with NFC interface with Bluetooth® / ZIP-BT-NFC starting around 3rd quarter / 2017

Smartphone requirements See current App description in the Google Play Store and/or Apple App Store.

Contents of ZIP-BT-NFC set

- ZIP-BT-NFC converter
- USB charging cable with USB type A plug
- Retaining strap
- Mounting instructions

Note USB mains adapter is not included in scope of delivery

Operating elements

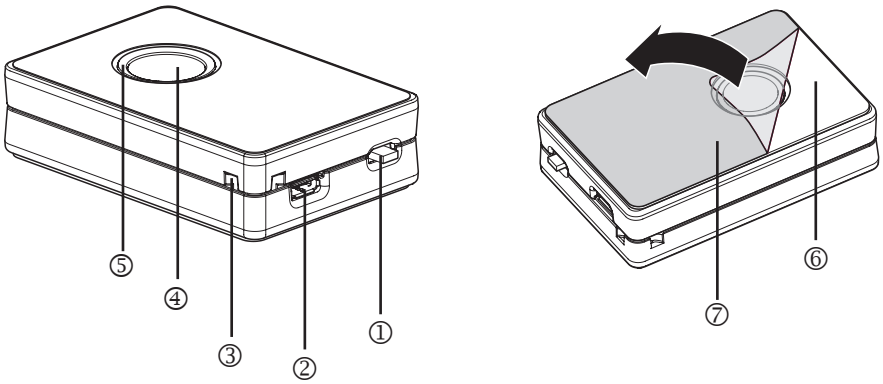

① Power switch

② Micro USB charging socket

③ Mounting port for retaining strap

④ Positioning port for NFC antenna

⑤ LED tunnel operating display

⑥ Rear with suction cup film

⑦ Suction cup film protection

Operating display

Function	LED colour	Light pattern	Meaning
Power ON (when switching the device on)	Green	Flashing 1x	Battery OK (>30%)
	Green > red	Flashing 1x	Low battery, charging needed
Operating display (ZIP-BT-NFC switched on)	Green	Flashing (every 5 s)	ZIP-BT-NFC switched on (standby mode)
	Blue	Flashing 1x	Bluetooth® connection established (pairing)
	White	Permanently on	Look for NFC tag (device)
	White	Flashing	NFC communication active
Charging the batteries (power switch OFF)	Green	Flashing	Charging the battery
	Green	Permanently on	Battery charged

Suction cup film

The underside of the ZIP-BT-NFC is equipped with a suction cup film. The adhesion is based on the suction effect of thousands of small craters on the surface which function like micro-suction cups.
The suction effect of the film is impaired by dirt on the surface.

Precondition For adhesion by suction to be effective, the surfaces on the ZIP-BT-NFC and the NFC device (actuator, etc.) must be clean and dry.

Cleaning The suction cup film can be cleaned with a damp cloth.
Adhesive tape (e.g. Scotch®Magic™) can be used to regenerate up to 80% of the original suction force of the suction cup film.

Protective film On new devices, the suction cup film comes equipped with a protective film which must be removed at the time of first use.

Note The max. suction force of the suction cup film is achieved after around 25...50 applications

Mode of operation

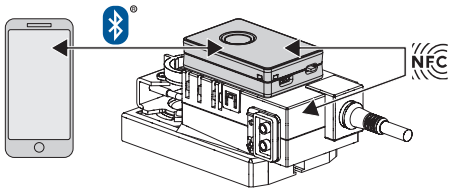

The ZIP-BT-NFC converter enables Belimo devices (NFC-capable actuators, …) to be operated with an iPhone or Android device. As shown in the illustration, Smartphone <> Belimo data transmission is wireless via a Bluetooth® BLE and/or NFC connection.

For the communication connection to be established, the ZIP-BT-NFC converter being used, as is usual with Bluetooth®, requires one-time pairing with the Smartphone.

The ZIP-BT-NFC is powered by the integrated battery.

The NFC interface of the Belimo device (actuator, …) can be addressed during active operation and also when deenergised.

Charging the battery

To charge the battery, the ZIP-BT-NFC is connected to a USB charger (of a Smartphone, laptop, etc.) using the USB cable supplied. The ZIP-BT-NFC can be switched off or on while charging. The converter can be used during charging.

Charge the battery fully before using it for the first time.

LED display
While charging: Flashes green.
Charging complete: Green.

Checking the battery
When the ZIP-BT-NFC is switched on, the battery is checked and displayed on the LED. Alternatively the charging status of the battery can be read using the App.

Note
The battery cannot be replaced.

Switching on/off, standby mode

The ZIP-BT-NFC is switched on/off using the power switch.

Standby mode
If the switched-on converter is not being used, the device automatically switches into standby mode to conserve the battery. The ZIP-BT-NFC will switch back to normal operating mode when addressed with the App.

Transport note
If the ZIP-BT-NFC is transported in an aircraft, it must first be switched off using the power switch.

Positioning on the NFC device

Precondition Adhesion of the ZIP-BT-NFC's suction film requires clean surfaces on the NFC device and the ZIP-BT-NFC. Dirty or dusty devices should be cleaned first.

Antenna The position of the NFC antenna is indicated on the device by the NFC logo. The centre of the antenna is directly below the logo or, as with VAV-Compact, is indicated by arrows.

Alignment The positioning port is aligned to the NFC antenna centre.

Note Sufficient pressure should be applied manually to fit the ZIP-BT-NFC on the actuator (40 N = 4 kg)

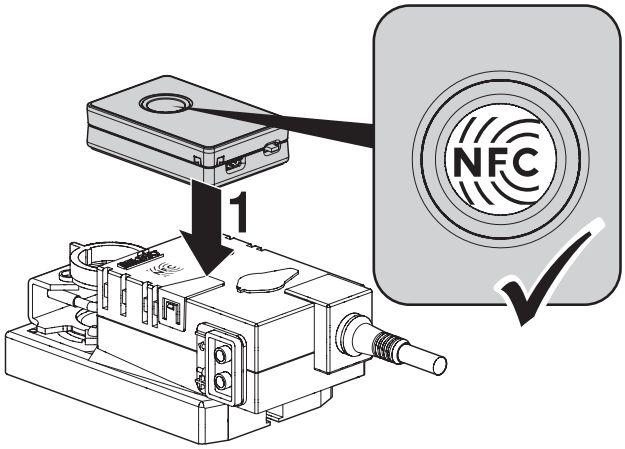

Securing with retaining strap The ZIP-BT-NFC can be secured to the NFC device with the retaining strap.
E.g., on the connecting cable, spindle clamp, etc.
We recommend securing with the retaining strap, especially when attaching the ZIP-BT-NFC to devices in an overhead or vertical mounting position.

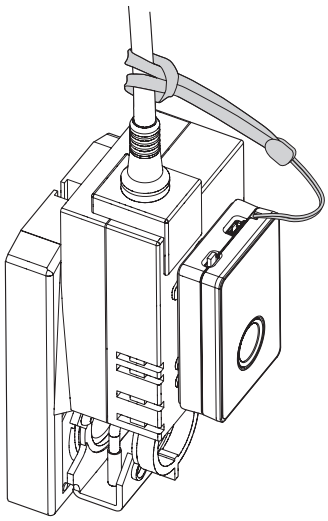

Note The ZIP-BT-NFC should be secured to the device with the retaining strap to avoid injury and damage to personnel and property.

Application, Bluetooth® pairing

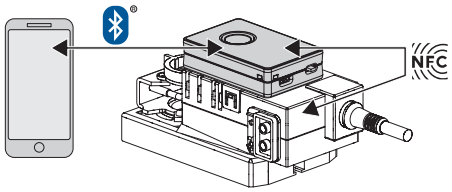

Preconditions
- Smartphone with installed Belimo App, e.g.: Assistant App
- ZIP-BT-NFC, power switch -> ON
- Belimo device with NFC interface.

NFC interface The Belimo device's NFC interface can also be addressed when deenergised.

Pairing procedure The Smartphone requires one-time pairing with the ZIP-BT-NFC.
The result of the process is displayed on the Smartphone.

Cancelling pairing Menu: Settings ¦ Communication

Starting the App for the first time

I Bluetooth® pairing (one-time procedure)

iOS	Android
Follow the App's pairing procedure.	Select ZIP-BT-NFC type of communication Follow the App's pairing procedure.

II Reading data

- Position the ZIP-BT-NFC on the antenna area of the selected device (actuator).
- Read data

III Changing/writing the setting

- Make desired settings.
- Write setting to device (actuator).
- Check displayed setting.

IV Removing the ZIP-BT-NFC

Reading/modifying other devices: Repeat steps II and III.

Option

Bluetooth® pairing with several ZIP-BT-NFCs

If necessary, several ZIP-BT-NFC can be used, but only one ZIP-BT-NFC may be active at a time. Potential application: Lab setup, VAV system with supply/exhaust unit.

iOS and Android

Option: Select manual section.
- All ZIP-BT-NFCs within range are listed with their device IDs.
- Select the desired ZIP-BT-NFC
- As an option, the ZIP-BT-NFC can be assigned a name.

Note Only one ZIP-BT-NFC can be active at any given time.

Android Smartphone with built-in NFC interface Alternatively the Android Smartphone, with activated NFC interface, can be held against the NFC device's (actuator) NFC antenna.
Menu: Settings ¦ Communication

Error description, symptoms, causes and rectification

No LED display when device is switched on	Battery not charged, initiate charging.
ZIP-BT-NFC suction cup film does not adhere	• Clean the surface of the device (actuator). • Wipe off suction cup film with a damp cloth and then dry, or • Use adhesive tape (e.g.: Scotch® Magic™) to peel off suction cup film
Connection with actuator cannot be established	• ZIP-BT-NFC is not switched on or battery is not charged. • NFC antennas not correctly aligned. Position the ZIP-BT-NFC correctly. • Device (actuator) does not have an NFC interface, use the tool in accordance with the device's product Information.
ZIP-BT-NFC does not appear in the App's overview of converters	• ZIP-BT-NFC is not switched on or battery is not charged. • ZIP-BT-NFC is already being used by another Smartphone.
Poor Bluetooth® connection or none at all	• Too many ambient influences or Bluetooth® transmission range exceeded. • Reduce distance between Smartphone and ZIP-BT-NFC

FCC / ISED - for US/Canada market relevant only)

FCC
This device complies with Part 15 of the FCC Rules. Operation is subject to the following two conditions:
1. This device may not cause harmful interference, and
2. This device must accept any interference received, including interference that may cause undesirable operation.

Any changes or modifications not expressly approved by Silicon Labs could void the user's authority to operate the equipment.

FCC RF Exposure Statement:
This equipment complies with FCC radiation exposure limits set forth for an uncontrolled environment. End users must follow the specific operating instructions for satisfying RF exposure compliance. This equipment shall be installed and operated with a minimum distance of 1 cm between the user and this device.

ISED
This device complies with Industry Canada's license-exempt RSS standards. Operation is subject to the following two conditions:
1. This device may not cause interference; and
2. This device must accept any interference, including interference that may cause undesired operation of the device.

RF Exposure Statement:
Equipment conforms to the RF Exposure Evaluation Limits laid down in RSS 102.

ISED (French)
Le présent appareil est conforme aux CNR d'Industrie Canada applicables aux appareils radio exempts de licence. L'exploitation est autorisée aux deux conditions suivantes:
1. L'appareil ne doit pas produire de brouillage;
2. L'utilisateur de l'appareil doit accepter tout brouillage radioélectrique subi, même si le brouillage est susceptible d'en compromettre le fonctionnement.

Déclaration d'exposition RF
L'équipement est conforme aux valeurs limites d'évaluation de l'exposition aux radiofréquences selon CNR 102.

The Bluetooth® word mark and logos are registered trademarks owned by the Bluetooth SIG, Inc. and any use of such marks by BELIMO is under license.
Other trademarks and trade names are those of their respective owners.