Characterised control valve with sensor-operated flow control, 2-way, Flange, PN 16 (EPIV)

- Nominal voltage AC/DC 24 V
- Control modulating, communicative, hybrid
- For closed water systems
- For modulating control of air-handling and heating systems on the water side
- Communication via BACnet MS/TP, Modbus RTU, Belimo-MP-Bus or conventional control
- Conversion of active sensor signals and switching contacts

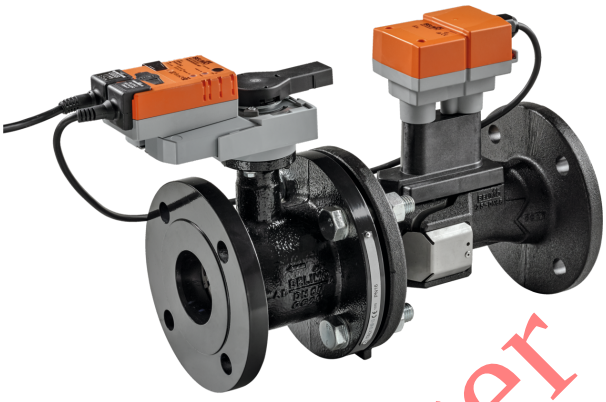

Picture may differ from product

Products no longer available

Type Overview

Type	DN	V'nom [l/s]	V'nom [l/min]	V'nom [m³/h]	Kvs theor. [m³/h]	PN
EP065F+MOD	65	8	480	28.8	50	16
EP080F+MOD	80	11	660	39.6	75	16
EP100F+MOD	100	20	1200	72	127	16
EP125F+MOD	125	31	1860	111.6	195	16
EP150F+MOD	150	45	2700	162	254	16

Kvs theor.: theoretical Kvs value for pressure drop calculation

Technical data

Electrical data	Nominal voltage	AC/DC 24 V
	Nominal voltage frequency	50/60 Hz
	Nominal voltage range	AC 19.2...28.8 V / DC 21.6...28.8 V
	Power consumption in operation	6 W (DN 65...80) 9 W (DN 100...150)
	Power consumption in rest position	4.5 W (DN 65...80) 6 W (DN 100...150)
	Power consumption for wire sizing	10 VA (DN 65...80) 12 VA (DN 100...150)
	Connection supply / control	Cable 1 m, 6x 0.75 mm²
Data bus communication	Communicative control	BACnet MS/TP Modbus RTU (factory setting) MP-Bus
	Number of nodes	BACnet / Modbus see interface description MP-Bus max. 8
Functional data	Operating range Y	2...10 V
	Operating range Y variable	0.5...10 V
	Position feedback U	2...10 V
	Position feedback U note	Max. 1 mA
	Position feedback U variable	Start point 0.5...8 V End point 2...10 V
	Sound power level motor	45 dB(A)
	V'max adjustable	30...100% of V'nom
	Control accuracy	±5% (of 25...100% V'nom) @ 20°C / Glycol 0% vol.
	Control accuracy note	±10% (of 25...100% V'nom) @ -10...120°C / Glycol 0...50% vol.
	Min. controllable flow	1% of V'nom
	Fluid	Water, water with glycol up to max. 50% vol.
	Fluid temperature	-10...120°C [14...248°F]

Technical data

Functional data	Close-off pressure	Δps 690 kPa
	Differential pressure	Δpmax 340 kPa
	Flow characteristic	equal percentage (VDI/VDE 2173), optimised in the opening range
	Flow characteristic note	switchable to linear (VDI/VDE 2173)
	Leakage rate	air-bubble tight, leakage rate A (EN 12266-1)
	Pipe connection	Flange according to EN 1092-2
	Installation orientation	upright to horizontal (in relation to the spindle)
	Servicing	maintenance-free
	Manual override	with push-button, can be locked
Flow measurement	Measuring principle	Ultrasonic flow measurement
	Measuring accuracy flow	±2% (of 25...100% V'nom) @ 20°C / glycol 0% vol.
	Measuring accuracy flow note	±6% (of 25...100% V'nom) @ -10...120°C / glycol 0...50% vol.
	Min. flow measurement	0.5% of V'nom
Safety data	Protection class IEC/EN	III, Safety Extra-Low Voltage (SELV)
	Degree of protection IEC/EN	IP54
	Pressure equipment directive	CE according to 2014/68/EU
	EMC	CE according to 2014/30/EU
	Type of action	Type 1
	Rated impulse voltage supply / control	0.8 kV
	Pollution degree	3
	Ambient humidity	Max. 95% RH, non-condensing
	Ambient temperature	-30...50°C [-22...122°F]
	Storage temperature	-20...80°C [-4...176°F]
Materials	Valve body	EN-GJL-250 (GG 25)
	Body finish	with protective paint
	Flow measuring pipe	EN-GJL-250 (GG 25), with protective paint
	Closing element	Stainless steel AISI 316
	Spindle	Stainless steel AISI 304
	Spindle seal	EPDM
	Seat	PTFE, O-ring Viton

Products no longer available

Safety notes

- This device has been designed for use in stationary heating, ventilation and air-conditioning systems and must not be used outside the specified field of application, especially in aircraft or in any other airborne means of transport.
- Outdoor application: Only possible if no (sea) water, snow, ice, sunlight or aggressive gases act directly on the device and if it is ensured that the ambient conditions remain within the limit values specified in the data sheet at all times.
- Only authorised specialists may carry out installation. All applicable legal or institutional installation regulations must be complied with during installation.
- The device contains electrical and electronic components and must not be disposed of as household refuse. All locally valid regulations and requirements must be observed.

Product features

Operating mode

The HVAC performance device is comprised of three components: characterised control valve (CCV), measuring pipe with flow sensor and the actuator itself. The adjusted maximum flow (V'max) is assigned to the maximum control signal (typically 100%). The HVAC performance device can be controlled via communicative signals. The fluid is detected by the sensor in the measuring pipe and is applied as the flow value. The measured value is balanced with the setpoint. The actuator corrects the deviation by changing the valve position. The angle of rotation α varies according to the differential pressure through the control element (see flow curves).

Flow rate curves

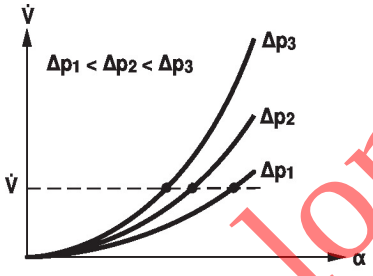

Transmission behaviour HE

Heat exchanger transmission behaviour

Depending on the construction, temperature spread, fluid characteristics and hydronic circuit, the power Q is not proportional to the water volumetric flow V' (Curve 1). With the classical type of temperature control, an attempt is made to maintain the control signal Y proportional to the power Q (Curve 2). This is achieved by means of an equal-percentage flow characteristic (Curve 3).

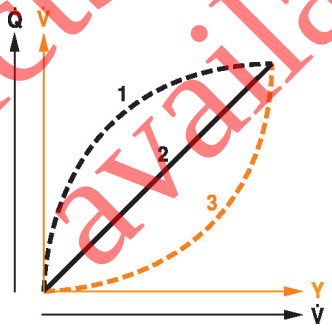

Products no longer available

Product features

Control characteristics

The fluid velocity is measured in the measuring component (sensor electronics) and converted into a flow rate signal.

The control signal Y corresponds to the power requirement Q at the exchanger. The flow is controlled in the EPIV. The control signal Y is converted into an equal-percentage characteristic curve and provided with the V'max value as the new reference variable w. The momentary control deviation forms the control signal Y1 for the actuator.

The specially configured control parameters in conjunction with the precise flow rate sensor ensure a stable control quality. They are, however, not suitable for rapid control processes, such as for domestic water control.

The measured flow rate is in l/min as an absolute flow output.

The absolute position sets the valve opening angle in %.

The relative position always refers to the nominal flow V'nom, i.e. if V'max is configured with 50% of V'nom, then the relative position at a setpoint of 100% is equal to 50% of V'nom.

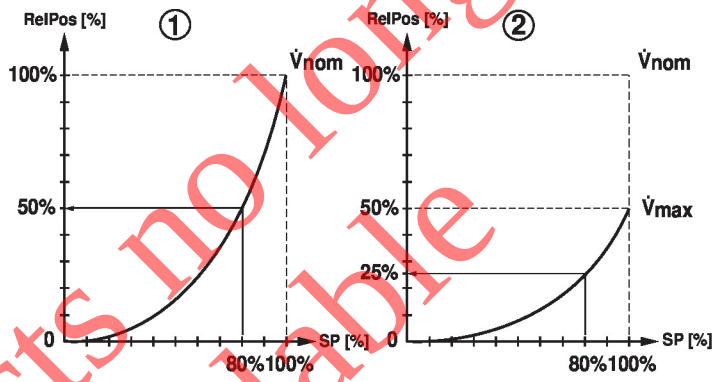

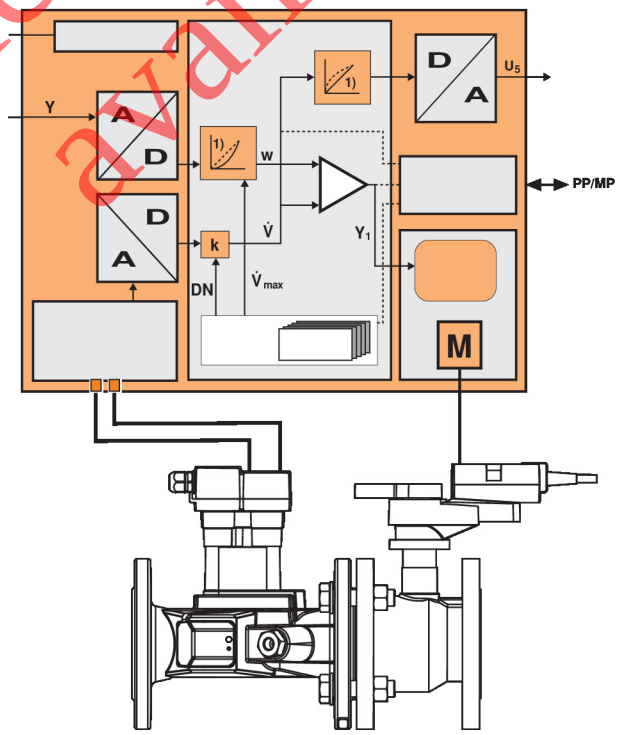

Products no longer available

Product features

Flow control

V'nom is the maximum possible flow.

V'max is the maximum flow rate which has been set with the highest control signal. V'max can be set between 30% and 100% of V'nom.

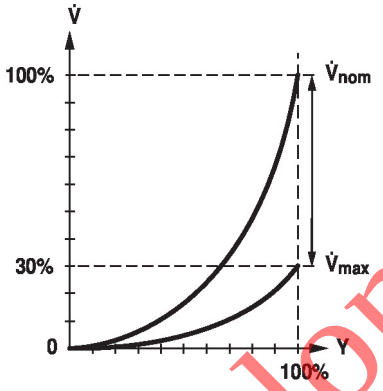

Creep flow suppression

Given the very low flow speed in the opening point, this can no longer be measured by the sensor within the required tolerance. This range is overridden electronically.

Opening valve

The valve remains closed until the flow required by the control signal DDC corresponds to 1% of V'nom. The control along the flow characteristic is active after this value has been exceeded.

Closing valve

The control along the flow characteristic is active up to the required flow rate of 1% of V'nom. Once the level falls below this value, the flow rate is maintained at 1% of V'nom. If the level falls below the flow rate of 0.5% of V'nom required by the control signal DDC, then the valve will close.

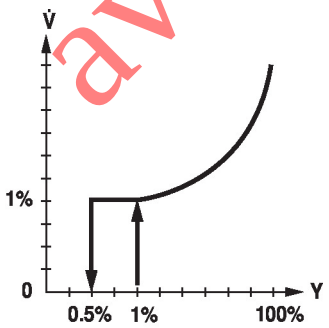

Converter for sensors

Connection option for a sensor (active or with switching contact). In this way, the analogue sensor signal can be easily digitised and transferred to the bus systems BACnet, Modbus or MP-Bus.

Configurable device

The factory settings cover the most common applications. Single parameters can be modified with Belimo Assistant 2 or ZTH EU.

The communication parameters of the bus systems (address, baud rate etc.) are set with the ZTH EU. Pressing the "Address" button on the actuator while connecting the supply voltage resets the communication parameters to the factory setting.

Quick addressing: The BACnet and Modbus address can alternatively be set using the buttons on the actuator and selecting 1...16. The selected value is added to the "basic address" parameter and results in the absolute BACnet and Modbus address.

Hydronic balancing

With the Belimo tools, the maximum flow rate (equivalent to 100% requirement) can be adjusted on-site, simply and reliably, in a few steps. If the device is integrated in the management system, then the balancing can be handled directly by the management system.

Combination analogue - communicative (hybrid mode)

With conventional control by means of an analogue control signal, BACnet or Modbus can be used for the communicative position feedback

Products no longer available

Product features

Manual override Manual override with push-button possible (the gear train is disengaged for as long as the button is pressed or remains locked).

High functional safety The actuator is overload protected, requires no limit switches and automatically stops when the end stop is reached.

Accessories

Tools	Description	Type
	Service tool, with ZIP-USB function, for configurable and communicative Belimo actuators, VAV controller and HVAC performance devices	ZTH EU
	Service tool for wired and wireless setup, on-site operation and troubleshooting.	Belimo Assistant 2
	Adapter for Service-Tool ZTH	MFT-C
	Connecting cable 5 m, A: RJ11 6/4 LINK.10, B: 6-pin for connection to service socket	ZK1-GEN
	Connecting cable 5 m, A: RJ11 6/4 LINK.10, B: free wire end for connection to MP/PP terminal	ZK2-GEN
	Belimo Assistant Link Bluetooth and USB to NFC and MP-Bus converter for configurable and communicative devices	LINK.10

Electrical accessories	Description	Type
	Stem heater flange F05 (30 W)	ZR24-F05

Electrical installation

Supply from isolating transformer.

The wiring of the line for BACnet MS/TP / Modbus RTU is to be carried out in accordance with applicable RS-485 regulations.

Modbus / BACnet: Supply and communication are not galvanically isolated. COM and ground of the devices must be connected to each other.

Wire colours:
1 = black
2 = red
3 = white
5 = orange
6 = pink
7 = grey

Functions:
C1 = D- (wire 6)
C2 = D+ (wire 7)

BACnet MS/TP / Modbus RTU

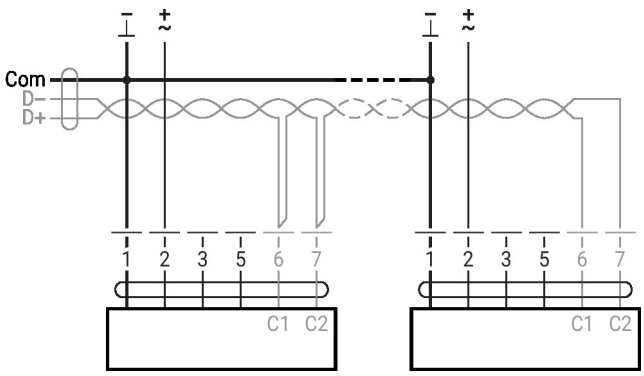

Modbus RTU / BACnet MS/TP with analogue setpoint (hybrid operation)

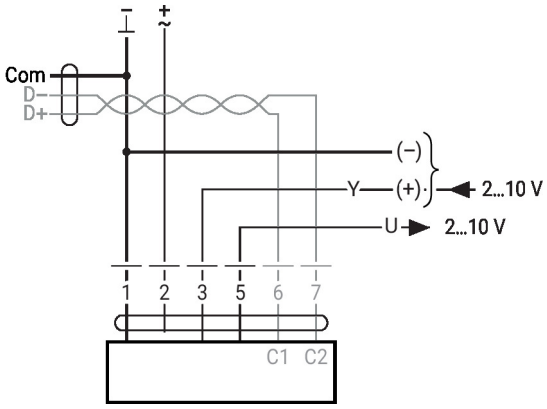

Products no longer available

Electrical installation

MP-Bus

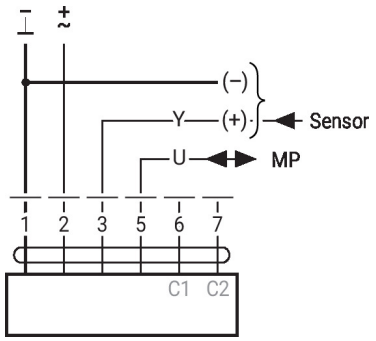

Converter for sensors

Connection with switching contact, e.g. differential pressure switch

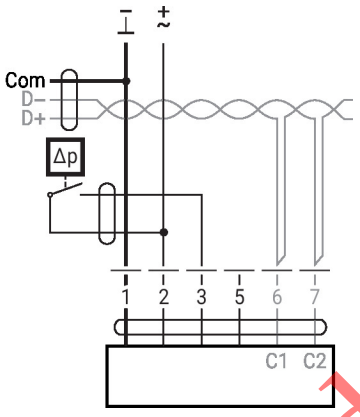

Switching contact requirements:
The switching contact must be able to switch a current of 16 mA at 24 V accurately.

Connection with active sensor, e.g. 0...10 V @ 0...50°C

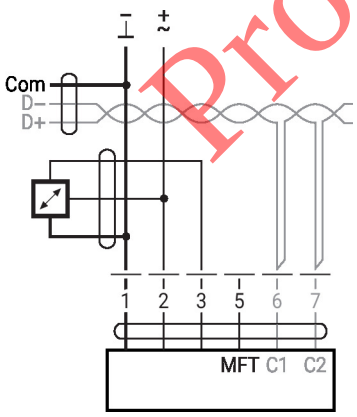

Possible input voltage range:
0...10 V
Resolution 30 mV

Products no longer available

Operating controls and indicators

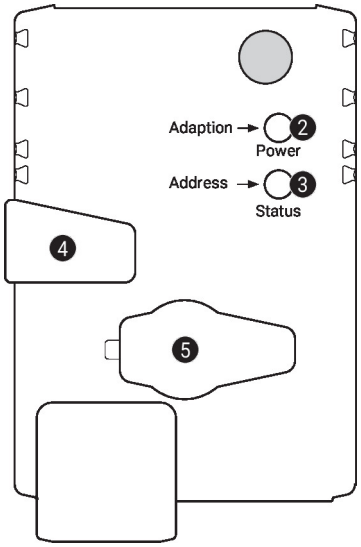

2 Push-button and LED display green

Off:	No power supply or malfunction
On:	In operation
Flashing:	In address mode: Pulses according to set address (1...16) When starting: Reset to factory setting (Communication)
Press button:	In standard mode: Triggers angle-of-rotation adaptation In address mode: Confirmation of set address (1...16)

3 Push-button and LED display yellow

Off:	Standard mode
On:	Adaptation or synchronisation process active or actuator in address mode (LED display green flashing)
Flickering:	BACnet / Modbus communication active
Press button:	In operation (>3 s): Switch address mode on and off In address mode: Address setting by pressing several times When starting (>5 s): Reset to factory setting (Communication)

4 Manual override button

Press button:	Gear train disengages, motor stops, manual override possible
Release button:	Gear train engages, standard mode

5 Service plug
For connecting configuration and service tools

Check power supply connection

2 Off and 3 On	Possible wiring error in power supply

Products no longer available

Installation notes

Permissible installation orientation

The ball valve can be installed upright to horizontal. The ball valve may not be installed in a hanging position, i.e. with the spindle pointing downwards.

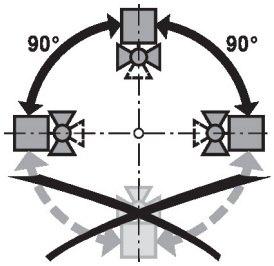

Installation location in return

Installation in the return is recommended.

Water quality requirements

The water quality requirements specified in VDI 2035 must be adhered to.

Belimo valves are regulating devices. For the valves to function correctly in the long term, they must be kept free from particle debris (e.g. welding beads during installation work). The installation of a suitable strainer is recommended.

The water must exhibit a conductivity ≥ 20 µS/cm during operation for correct functioning. It should be noted that, under normal circumstances, even filling water with a lower conductivity will experience an elevation of its conductivity to above the minimum required value during filling and that the system can thus be put into operation.

Elevation of conductivity during filling caused by:

- untreated residual water from pressure test or pre-rinsing
- metal salts (e.g. surface rust) dissolved out of the raw material

Installation notes

Stem heater

In cold water applications and warm humid ambient air, condensation can be caused in the actuators. This can lead to corrosion in the gear train of the actuator and a breakdown of the actuator. In such applications, the use of a stem heater is recommended.

The stem heater must only be activated when the system is in operation because it does not have a temperature controller.

Servicing

Ball valves, rotary actuators and sensors are maintenance-free.

Before any service work on the control element is carried out, it is essential to isolate the rotary actuator from the power supply (by unplugging the electrical cable if necessary). Any pumps in the part of the piping system concerned must also be switched off and the appropriate slide valves closed (allow all components to cool down first if necessary and always reduce the system pressure to ambient pressure level).

The system must not be returned to service until the ball valve and the rotary actuator have been correctly reassembled in accordance with the instructions and the pipeline has been refilled by professionally trained personnel.

Flow direction

The direction of flow, specified by an arrow on the housing, is to be complied with, since otherwise the flow rate will be measured incorrectly.

Inlet section

A flow calming section or inlet section in the direction of flow must be maintained in front of the flow sensor to achieve the specified measuring accuracy. Its dimensions should be at least 5x DN.

DN	L min.
65	5 x 65 mm = 325 mm
80	5 x 80 mm = 400 mm
100	5 x 100 mm = 500 mm
125	5 x 125 mm = 625 mm
150	5 x 150 mm = 750 mm

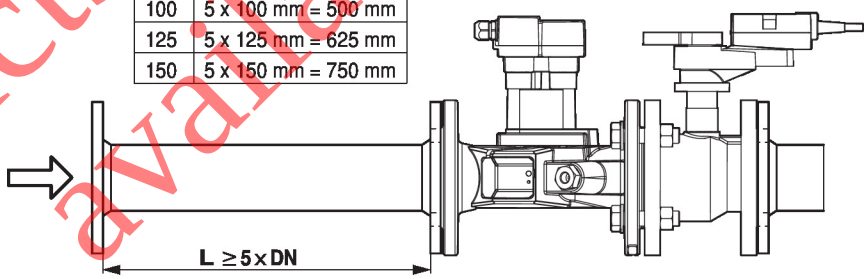

Split installation

The valve-actuator combination may be mounted separately from the flow sensor. The direction of flow of both components must be observed.

Products no longer available

General notes

Valve selection

The valve is determined using the maximum required flow rate V'max.

A calculation of the Kvs value is not required.

V'max = 30...100% of V'nom

If no hydronic data is available, the same valve DN can be selected as the heat exchanger nominal diameter.

General notes

Minimum differential pressure (pressure drop)

The minimum required differential pressure (pressure drop through the valve) for achieving the desired flow V'max can be calculated with the aid of the theoretical Kvs value (see type overview) and the below-mentioned formula. The calculated value is dependent on the required maximum flow V'max. Higher differential pressures are compensated for automatically by the valve.

Formula

$$\Delta p_{min} = 100 \times \left(\frac{V'_{max}}{K_{vs}\ theor.} \right)^2$$

Δp_{min}: kPa
V'_{max}: m³/h
K_{vs} theor.: m³/h

Example (DN 100 with the desired maximum flow rate = 50% V'nom)

EP100F+MOD
K_{vs} theor. = 127 m³/h
V'_{nom} = 1200 l/min
50% x 1200 l/min = 600 l/min = 36 m³/h

$$\Delta p_{min} = 100 \times \left(\frac{V'_{max}}{K_{vs}\ theor.} \right)^2 = 100 \times \left(\frac{36\ m^3/h}{127\ m^3/h} \right)^2 = 8\ kPa$$

Behaviour in case of sensor failure

In case of a flow sensor error, the EPIV will switch from flow control to position control.

Once the error disappears, the EPIV will switch back to the normal control setting.

Service

Using Belimo Assistant 2, device parameters can be modified. Belimo Assistant 2 can operate on a smartphone, tablet or PC. The available connection options vary depending on the hardware on which Belimo Assistant 2 is installed.

For more information about Belimo Assistant 2, refer to the Quick Guide – Belimo Assistant 2.

Wired connection

Belimo devices can be accessed by connecting Belimo Assistant Link to the USB port on a PC or laptop and to the service socket or MP-Bus wire on the device.

Belimo Assistant 2 acts as MP client. Therefore, no other MP client shall be connected to the device.

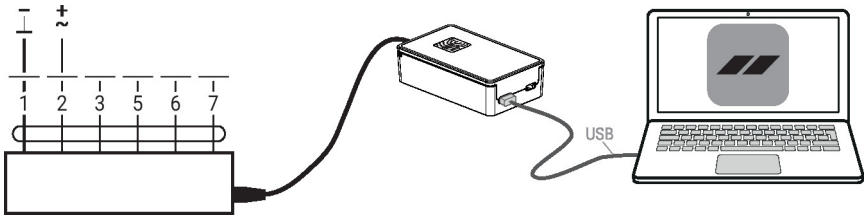

Quick addressing

1. Press the "Address" button until the green "Power" LED is no longer illuminated. The green "Power" LED flashes in accordance with the previously set address.

2. Set the address by pressing the "Address" button the corresponding number of times (1...16).

3. The green LED flashes in accordance with the address that has been entered (1...16). If the address is not correct, it can be reset in accordance with step 2.

4. Confirm the address setting by pressing the green "Adaptation" button.

If the address is not confirmed within 60 seconds, the address procedure will be ended. Any address change that has already been started will be discarded.

The resulting BACnet MS/TP and Modbus RTU address is made up of the set basic address plus the short address (e.g. 100+7=107).

Products no longer available

Dimensions

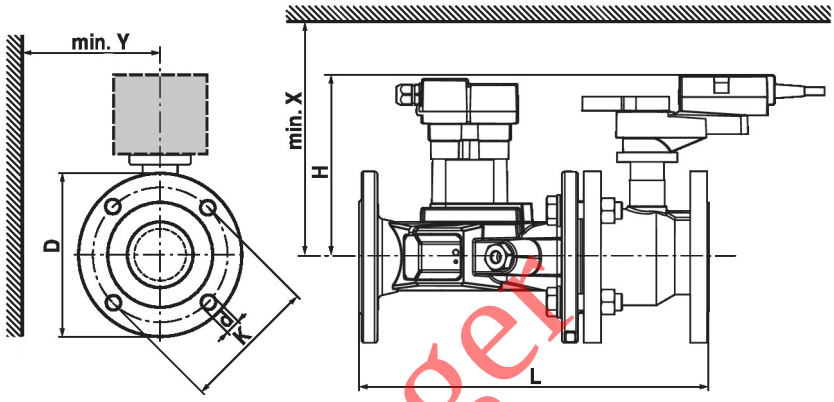

If Y <180 mm, the extension of the hand crank must be demounted as necessary.

Type	DN	L [mm]	H [mm]	D [mm]	d [mm]	K [mm]	X [mm]	Y [mm]	kg
EP065F+MOD	65	379	205	185	4 x 19	145	220	150	25
EP080F+MOD	80	430	205	200	8 x 19	160	220	160	32
EP100F+MOD	100	474	221	229	8 x 19	180	240	175	46
EP125F+MOD	125	579	249	252	8 x 19	210	260	190	60
EP150F+MOD	150	651	249	282	8 x 23	240	260	200	73

Further documentation

- Tool connections
- BACnet Interface description
- Modbus Interface description
- Overview MP Cooperation Partners
- MP Glossary
- Introduction to MP-Bus Technology
- General notes for project planning
- Quick Guide – Belimo Assistant 2

Products no longer available