Characterised control valve with sensor-operated flow rate or power control with fail-safe, power and energy-monitoring function, 2-way, Flange, PN 16 (Energy Valve)

- Nominal voltage AC/DC 24 V
- Control modulating, communicative, hybrid, Cloud
- For closed water systems
- For modulating control of air-handling and heating systems on the water side
- Ethernet 10/100 Mbit/s, TCP/IP, integrated web server
- Communication via BACnet, Modbus, Belimo MP-Bus or conventional control
- optional Belimo Cloud connection
- Glycol monitoring

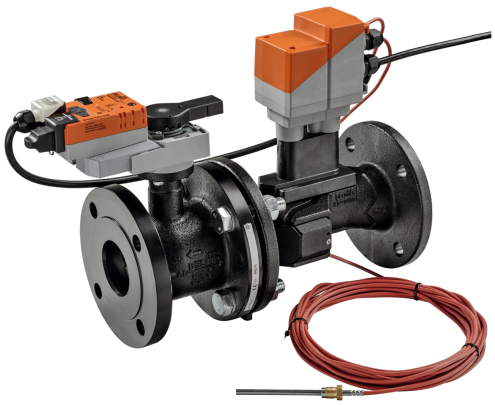

Picture may differ from product

Type Overview

Type	DN	V'nom [l/s]	V'nom [l/min]	V'nom [m³/h]	Kvs theor. [m³/h]	PN
EV065F+KBAC	65	8	480	28.8	50	16
EV080F+KBAC	80	11	660	39.6	75	16
EV100F+KBAC	100	20	1200	72	127	16
EV125F+KBAC	125	31	1860	111.6	195	16
EV150F+KBAC	150	45	2700	162	254	16

Kvs theor.: theoretical Kvs value for pressure drop calculation

Technical data

Electrical data	Nominal voltage	AC/DC 24 V
	Nominal voltage frequency	50/60 Hz
	Nominal voltage range	AC 19.2...28.8 V / DC 21.6...28.8 V
	Power consumption in operation	15.5 W (DN 65...80) 16.5 W (DN 100...150)
	Power consumption in rest position	6.5 W
	Power consumption for wire sizing	26 VA (DN 65...80) 29 VA (DN 100...150)
	Connection supply / control	Cable 1 m, 6x 0.75 mm²
	Connection Ethernet	RJ45 socket
	Parallel operation	Yes (note the performance data)
Data bus communication	Communicative control	BACnet/IP, BACnet MS/TP Modbus TCP, Modbus RTU MP-Bus Cloud
	Number of nodes	BACnet / Modbus see interface description MP-Bus max. 8
Functional data	Operating range Y	2...10 V
	Operating range Y variable	0.5...10 V
	Input impedance	100 kΩ
	Position feedback U	2...10 V
	Position feedback U note	Max. 1 mA
	Position feedback U variable	0...10 V 0.5...10 V
	Setting fail-safe position	NC/NO or adjustable 0...100% (POP rotary knob)
	Running time fail-safe	35 s / 90°
	Sound power level motor	45 dB(A)

Technical data

Functional data	Sound power level, fail-safe	61 dB(A)
	V'max adjustable	30...100% of V'nom
	Control accuracy	±5% (of 25...100% V'nom) @ 20°C / Glycol 0% vol.
	Control accuracy note	±10% (of 25...100% V'nom) @ -10...120°C / Glycol 0...50% vol.
	Min. controllable flow	1% of V'nom
	Configuration	via integrated web server / ZTH EU
	Fluid	Water, water with glycol up to max. 50% vol.
	Fluid temperature	-10...120°C [14...248°F]
	Close-off pressure	Δps 690 kPa
	Differential pressure	Δpmax 340 kPa
	Flow characteristic	equal percentage (VDI/VDE 2173), optimised in the opening range
	Flow characteristic note	switchable to linear (VDI/VDE 2173)
	Leakage rate	air-bubble tight, leakage rate A (EN 12266-1)
	Pipe connection	Flange according to EN 1092-2
	Installation orientation	upright to horizontal (in relation to the spindle)
	Servicing	maintenance-free
	Manual override	with push-button
Temperature measurement	Measuring accuracy absolute temperature	±0.35°C @ 10°C [±0.65°F @ 50°F] (Pt1000 EN60751 Class B) ±0.6°C @ 60°C [±1.1°F @ 140°F] (Pt1000 EN60751 Class B)
	Measuring accuracy differential temperature	±0.18 K @ ΔT = 10 K ±0.23 K @ ΔT = 20 K
Flow measurement	Measuring principle	Ultrasonic flow measurement
	Measuring accuracy flow	±2% (of 25...100% V'nom) @ 20°C / glycol 0% vol.
	Measuring accuracy flow note	±6% (of 25...100% V'nom) @ -10...120°C / glycol 0...50% vol.
	Min. flow measurement	0.5% of V'nom
Glycol monitoring	Measurement display glycol	0...40% or >40%
	Measuring accuracy glycol monitoring	±4% (0...40%)
Safety data	Protection class IEC/EN	III, Safety Extra-Low Voltage (SELV)
	Degree of protection IEC/EN	IP40 IP54 when using protective cap or protective grommet for RJ45 socket
	Pressure equipment directive	CE according to 2014/68/EU
	EMC	CE according to 2014/30/EU
	Type of action	Type 1.AA
	Rated impulse voltage supply / control	0.8 kV
	Pollution degree	3
	Ambient humidity	Max. 95% RH, non-condensing
	Ambient temperature	-30...50°C [-22...122°F]
	Storage temperature	-40...80°C [-40...176°F]
Materials	Valve body	EN-GJL-250 (GG 25)
	Body finish	with protective paint
	Flow measuring pipe	EN-GJL-250 (GG 25), with protective paint

Technical data

Materials	Closing element	Stainless steel AISI 316
	Spindle	Stainless steel AISI 304
	Spindle seal	EPDM
	Seat	PTFE, O-ring Viton
	Immersion sleeve	Stainless steel AISI 316
Terms	Abbreviations	POP = Power off position / fail-safe position

Safety notes

- This device has been designed for use in stationary heating, ventilation and air-conditioning systems and must not be used outside the specified field of application, especially in aircraft or in any other airborne means of transport.
- Outdoor application: Only possible if no (sea) water, snow, ice, sunlight or aggressive gases act directly on the device and if it is ensured that the ambient conditions remain within the limit values specified in the data sheet at all times.
- Only authorised specialists may carry out installation. All applicable legal or institutional installation regulations must be complied with during installation.
- The device contains electrical and electronic components and must not be disposed of as household refuse. All locally valid regulations and requirements must be observed.

Product features

Operating mode

The HVAC performance device is comprised of four components: characterised control valve (CCV), measuring pipe with flow sensor, temperature sensors and the actuator itself. The adjusted maximum flow (V'max) is assigned to the maximum control signal DDC (typically 10 V / 100%). Alternatively, the control signal DDC can be assigned to the valve opening angle or to the power required on the heat exchanger (see power control). The HVAC performance device can be controlled via communicative or analogue signals. The fluid is detected by the sensor in the measuring pipe and is applied as the flow value. The measured value is balanced with the setpoint. The actuator corrects the deviation by changing the valve position. The angle of rotation α varies according to the differential pressure through the control element (see flow curves).

With the supply voltage the integrated capacitors will be charged.

Interrupting the supply voltage causes the valve to be moved to the selected fail-safe position by means of stored electrical energy.

Flow rate curves

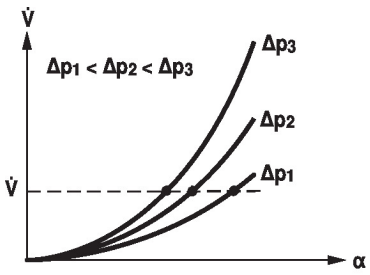

Product features

Pre-charging time (start up)

The capacitor actuators require a pre-charging time. This time is used for charging the capacitors up to a usable voltage level. This ensures that, in the event of a power failure, the actuator can move at any time from its current position into the preset fail-safe position. The duration of the pre-charging time depends mainly on how long the power was interrupted.

Typical pre-charging time

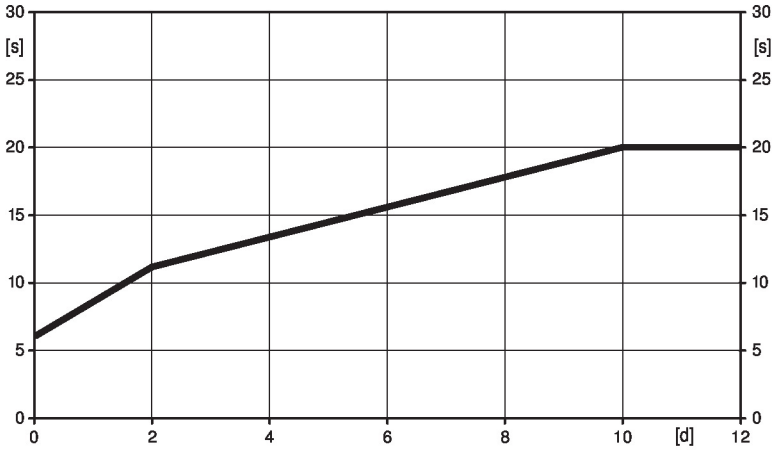

[d] = Power failure in days
[s] = Pre-charging time in seconds

	[d]				
	0	1	2	7	≥10
[s]	6	9	11	16	20

Delivery condition (capacitors)

The actuator is completely discharged after delivery from the factory, which is why the actuator requires approximately 20 s pre-charging time before initial commissioning in order to bring the capacitors up to the required voltage level.

Setting fail-safe position

The rotary knob fail-safe position can be used to adjust the desired fail-safe position 0...100% in 10% increments. The rotary knob always refers to the adapted angle of rotation range. In the event of a power failure, the actuator will move into the selected fail-safe position.

Transmission behaviour HE

Heat exchanger transmission behaviour

Depending on the construction, temperature spread, fluid characteristics and hydronic circuit, the power Q is not proportional to the water volumetric flow V' (Curve 1). With the classical type of temperature control, an attempt is made to maintain the control signal Y proportional to the power Q (Curve 2). This is achieved by means of an equal-percentage flow characteristic (Curve 3).

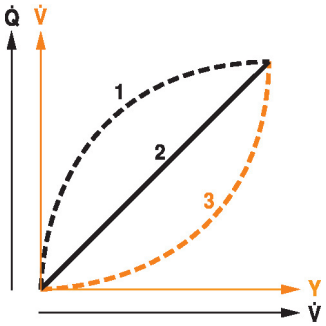

Product features

Power control

Alternatively, the control signal DDC can be assigned to the output power required at the heat exchanger.

Depending on the water temperature and air conditions, the Energy Valve ensures the amount of water V' required to achieve the desired power.

Maximum controllable power on heat exchanger in power control mode:

DN 65	1700 kW
DN 80	2400 kW
DN 100	4200 kW
DN 125	6500 kW
DN 150	9500 kW

Control characteristics

The specially configured control parameters in connection with the precise velocity sensor ensure a stable quality of control. They are, however, not suitable for rapid control processes, i.e. for domestic water control.

Power control

Q'nom is the maximum possible power output on the heat exchanger.

Q'max is the maximum power output on the heat exchanger which has been set with the highest control signal DDC. Q'max can be set between 1% and 100% of Q'nom.

Q'min 0% (non-variable).

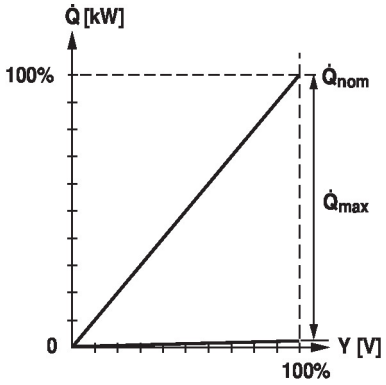

Flow control

V'nom is the maximum possible flow.

V'max is the maximum flow rate which has been set with the highest control signal. V'max can be set between 30% and 100% of V'nom.

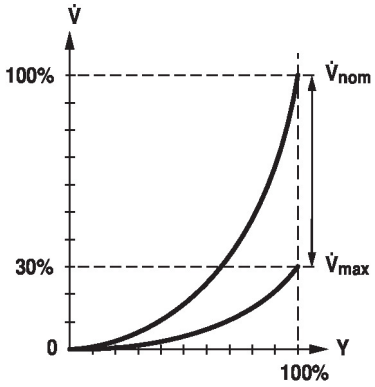

Product features

Creep flow suppression

Given the very low flow speed in the opening point, this can no longer be measured by the sensor within the required tolerance. This range is overridden electronically.

Opening valve

The valve remains closed until the flow required by the control signal DDC corresponds to 1% of V'nom. The control along the flow characteristic is active after this value has been exceeded.

Closing valve

The control along the flow characteristic is active up to the required flow rate of 1% of V'nom. Once the level falls below this value, the flow rate is maintained at 1% of V'nom. If the level falls below the flow rate of 0.5% of V'nom required by the control signal DDC, then the valve will close.

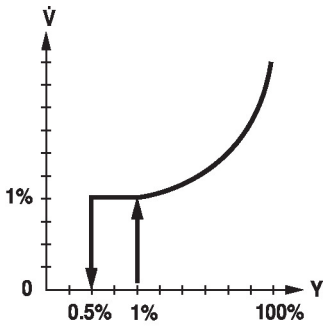

Configurable device

The factory settings cover the most common applications. Single parameters can be modified with Belimo Assistant 2 or ZTH EU.

Communication

The configuration can be carried out through the integrated web server (RJ45 connection to the web browser) or by communicative means.

Additional information regarding the integrated web server can be found in the separate documentation.

"Peer to Peer" connection
http://belimo.local:8080
The Notebook must be set to "DHCP".
Make sure that only one network connection is active.

Standard IP address:
http://192.168.0.10:8080
Static IP address

Password (read-only):
User name: «guest»
Password: «guest»

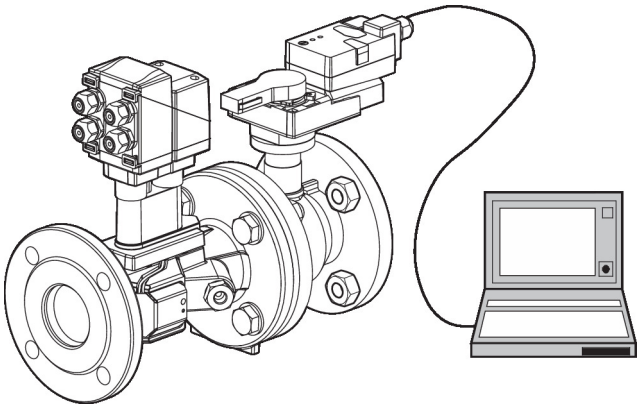

Control signal inversion

This can be inverted in cases of control with an analogue control signal DDC. The inversion causes the reversal of the standard behaviour, i.e. at a control signal DDC of 0%, regulation is to V'max or Q'max, and the valve is closed at a control signal DDC of 100%.

Hydronic balancing

Via the integrated web server, the maximum flow rate (equivalent to 100% requirement) can be adjusted on the device itself, simply and reliably, in a few steps. If the device is integrated in the management system, then the balancing can be handled directly by the management system.

Product features

Delta-T manager

If a heating or cooling register is operated with a differential temperature that is too low and thus with a flow rate that is too high, this will not result in an increased power output.

Nevertheless, heating or cooling machines must provide the energy at a lower degree of efficiency. This means, that pumps circulate too much water and increase energy consumption unnecessarily.

With the aid of the Energy Valve, it is simple to discover that operation is being carried out at a differential temperature that is too low, resulting in the inefficient use of energy.

Necessary setting adjustments can now be carried out quickly and easily at any time. The integrated differential temperature limiting offers the user the possibility of defining a low limit value. The Energy Valve limits the flow rate automatically to prevent the level from falling below this value.

The settings of the Delta-T manager can be made either directly on the web server or via the Belimo Cloud a direct analysis of the Delta-T behavior is carried out by Belimo experts.

Power output of the heating or cooling registers 1
Diff. temperature between supply and return 2
Loss zone (heating or cooling register saturation) 3
Adjustable minimum differential temperature 4

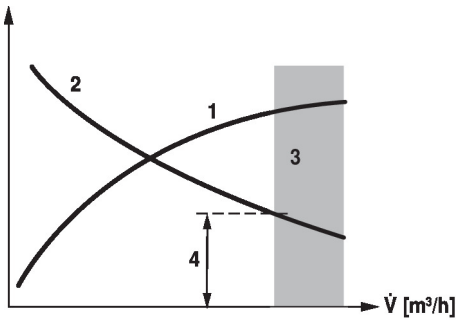

Combination analogue - communicative (hybrid mode)

With conventional control by means of an analogue control signal DDC, the integrated web server, BACnet, Modbus or MP-Bus can be used for the communicative position feedback.

Power and energy monitoring function

The HVAC performance device is equipped with two temperature sensors. One sensor (T2) is integrated in the measuring pipe, the second sensor (T1) is included with the system, prewired, and must be installed in the water circuit on site. The sensors are used to record the fluid temperature of the supply and return lines of the consumer (heating/cooling coil). As the water quantity is also known, thanks to the flow measurement integrated in the system, the power released from the consumer can be calculated. Furthermore, the heating/cooling energy is also determined automatically by means of the evaluation of the power over time.

The current data, e.g. temperatures, volumetric flow volumes, exchanger energy consumption etc. can be recorded and accessed at any time by means of web browsers or communication.

Data recording

The recorded data (integrated data recording for 13 months) can be used for the optimisation of the overall system and for the determination of the performance of the consumer (heating/cooling coil).

Download csv files through web browser.

Belimo Cloud

Additional services are available if the Energy Valve is connected to the Belimo Cloud: for instance, several devices may be managed via Internet. Also, Belimo experts may help analyse the delta-T behaviour or provide written reports about the Energy Valve performance. The "Terms of Use for Belimo Cloud Services" in their currently valid version apply to the use of Belimo Cloud services.

Glycol monitoring

Glycol monitoring measures the actual glycol content, which is necessary for safe operation and optimised heat exchange.

Manual override

Manual control with push-button possible - temporary. The gear train is disengaged and the actuator decoupled for as long as the button is pressed.

High functional safety

The actuator is overload protected, requires no limit switches and automatically stops when the end stop is reached.

Accessories

Tools	Description	Type
	Service tool, with ZIP-USB function, for configurable and communicative Belimo actuators, VAV controller and HVAC performance devices	ZTH EU
	Connecting cable 5 m, A: RJ11 6/4 LINK.10, B: 6-pin for connection to service socket	ZK1-GEN
	Belimo Assistant Link Bluetooth and USB to NFC and MP-Bus converter for configurable and communicative devices	LINK.10

Electrical accessories	Description	Type
	Grommet for RJ connection module, Multipack 50 pcs.	Z-STRJ.1
	Stem heater flange F05 (30 W)	ZR24-F05

Electrical installation

Supply from isolating transformer.

Parallel connection of other actuators possible. Observe the performance data.

The wiring of the line for BACnet MS/TP / Modbus RTU is to be carried out in accordance with applicable RS-485 regulations.

Modbus / BACnet: Supply and communication are not galvanically isolated. COM and ground of the devices must be connected to each other.

Wire colours:
1 = black
2 = red
3 = white
5 = orange
6 = pink
7 = grey

Functions:
C1 = D- (wire 6)
C2 = D+ (wire 7)

AC/DC 24 V, output signal

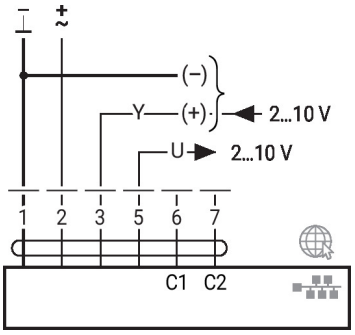

BACnet MS/TP / Modbus RTU

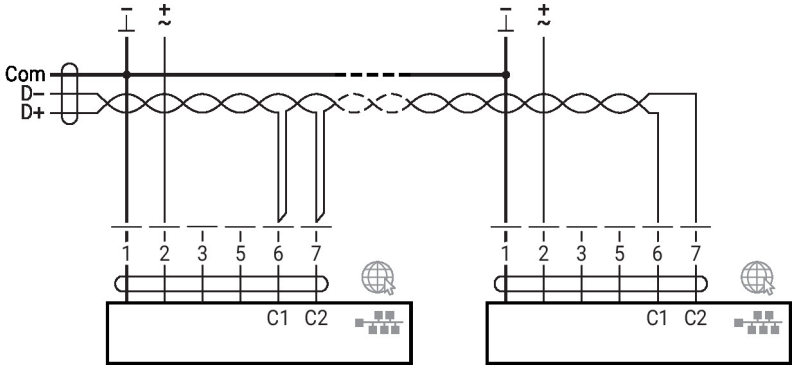

Electrical installation

BACnet/IP / Modbus TCP

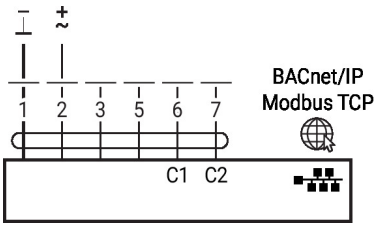

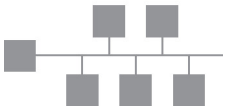

Optional connection via RJ45 (direct connection to notebook / connection via Intranet or Internet) for access to the integrated web server

Further electrical installations

Functions with specific parameters (configuration necessary)

MP-Bus Network topology

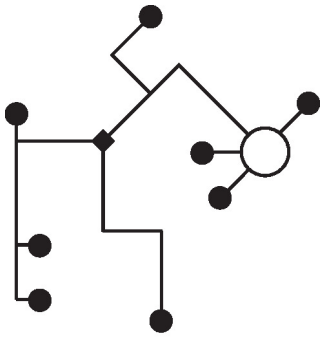

There are no restrictions for the network topology (star, ring, tree or mixed forms are permitted).
Supply and communication in one and the same 3-wire cable
• no shielding or twisting necessary
• no terminating resistors required

Override control and limiting with DC 24 V with relay contacts (with conventional control or hybrid mode)

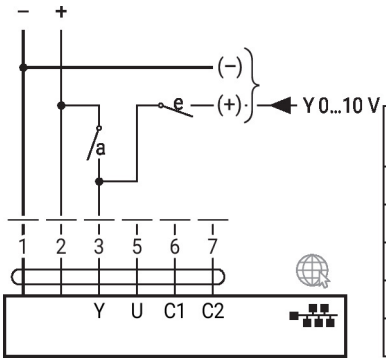

1	2	a	e	
⊥	⊥	–	–	Close
⊥	⊥	–	⊥	Y
⊥	⊥	⊥	–	Open[1)]
⊥	⊥	⊥	–	V'_{max} [2)]
⊥	⊥	⊥	–	Q'_{max} [3)]

1) Position control
2) Flow control
3) Power control

Further electrical installations

Functions with specific parameters (configuration necessary)

BACnet MS/TP / Modbus RTU with analogue setpoint (hybrid mode)

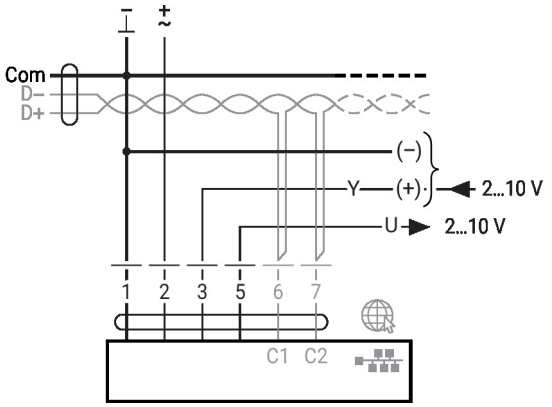

BACnet/IP / Modbus TCP with analogue setpoint (hybrid mode)

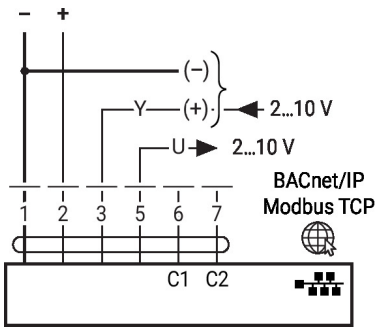

MP-Bus, supply via 3-wire connection

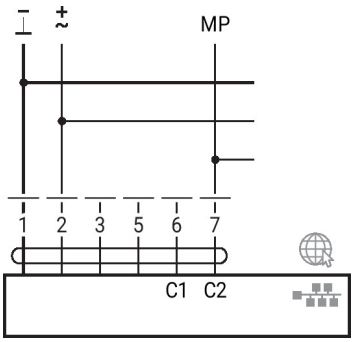

MP-Bus via 2-wire connection, local power supply

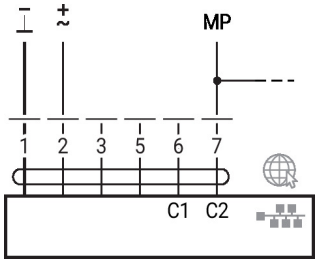

Max. 8 additional MP-Bus nodes

MP-Bus with analogue setpoint (hybrid mode)

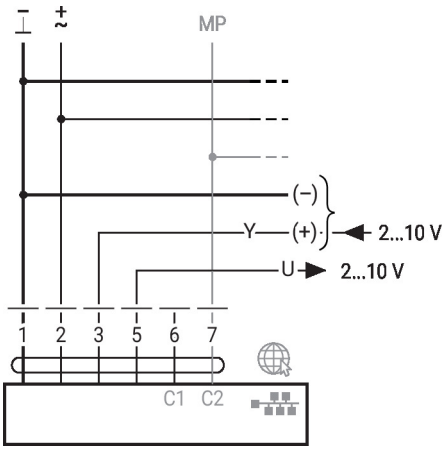

Operating controls and indicators

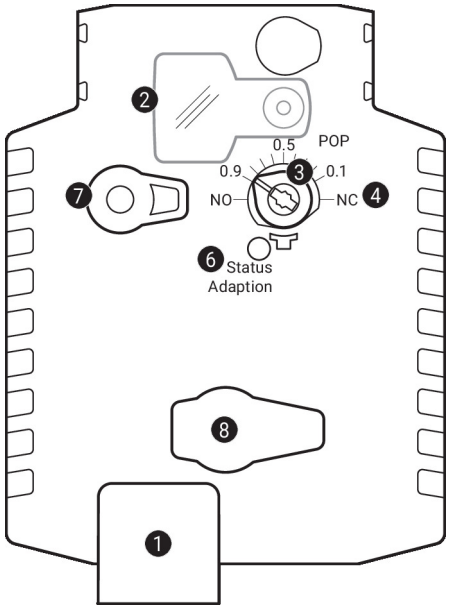

1 LED display green

Off:	No power supply or wiring error
On:	In operation
Flickering:	Internal communication (valve/sensor)

2 Cover, POP button

3 POP button

4 Scale for manual adjustment

6 Push-button and LED display yellow

On:	Adaptation or synchronisation process active
Flashing:	POP function active
Off:	Not in operation, pre-charging time SuperCap, fault SuperCap
Press button:	Triggers angle-of-rotation adaptation, followed by standard mode

7 Manual override button

Press button:	Gear train disengages, motor stops, manual override possible
Release button:	Gear train engages, followed by standard mode

8 Service plug
For connecting configuration and service tools

Setting fail-safe position

Setting fail-safe position (POP)

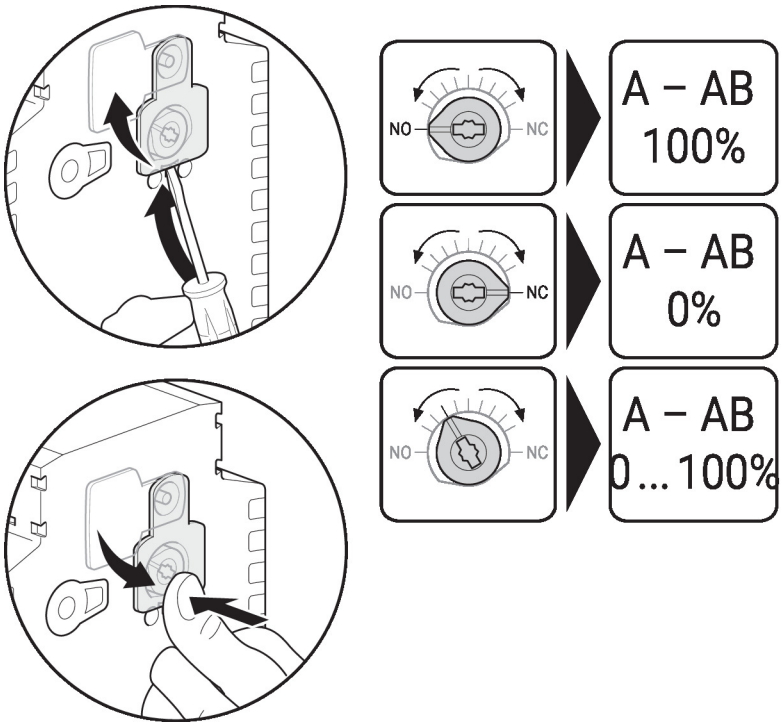

Installation notes

Permissible installation orientation

The ball valve can be installed upright to horizontal. The ball valve may not be installed in a hanging position, i.e. with the spindle pointing downwards.

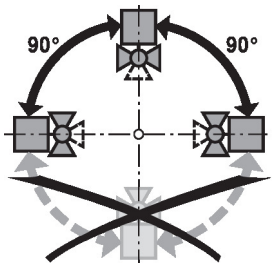

Installation location in return

Installation in the return is recommended.

Water quality requirements

The water quality requirements specified in VDI 2035 must be adhered to.

Belimo valves are regulating devices. For the valves to function correctly in the long term, they must be kept free from particle debris (e.g. welding beads during installation work). The installation of a suitable strainer is recommended.

Stem heater

In cold water applications and warm humid ambient air, condensation can be caused in the actuators. This can lead to corrosion in the gear train of the actuator and a breakdown of the actuator. In such applications, the use of a stem heater is recommended.

The stem heater must only be activated when the system is in operation because it does not have a temperature controller.

Servicing

Ball valves, rotary actuators and sensors are maintenance-free.

Before any service work on the control element is carried out, it is essential to isolate the rotary actuator from the power supply (by unplugging the electrical cable if necessary). Any pumps in the part of the piping system concerned must also be switched off and the appropriate slide valves closed (allow all components to cool down first if necessary and always reduce the system pressure to ambient pressure level).

The system must not be returned to service until the ball valve and the rotary actuator have been correctly reassembled in accordance with the instructions and the pipeline has been refilled by professionally trained personnel.

Flow direction

The direction of flow, specified by an arrow on the housing, is to be complied with, since otherwise the flow rate will be measured incorrectly.

Inlet section

A flow calming section or inlet section in the direction of flow must be maintained in front of the flow sensor to achieve the specified measuring accuracy. Its dimensions should be at least 5x DN.

DN	L min.
65	5 x 65 mm = 325 mm
80	5 x 80 mm = 400 mm
100	5 x 100 mm = 500 mm
125	5 x 125 mm = 625 mm
150	5 x 150 mm = 750 mm

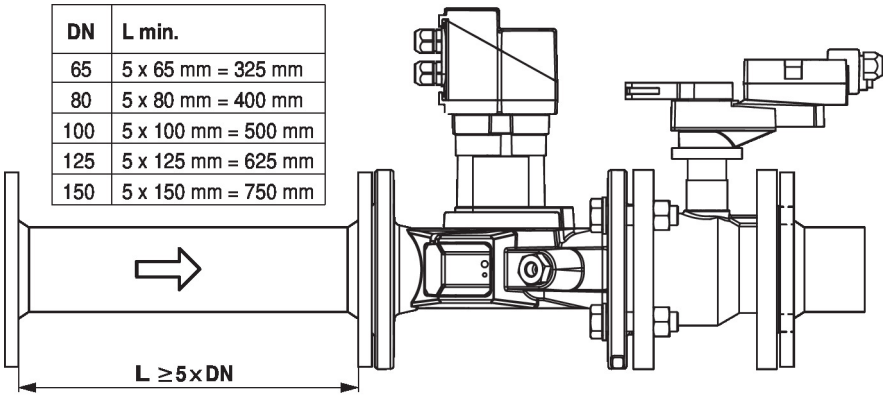

Installation notes

Mounting of immersion sleeve and temperature sensor

The valve is equipped with two temperature sensors:

• T2: One sensor is already installed in the valve unit.

• T1: The second sensor must be mounted at the installation site ahead of the consumer (valve in the return line; recommended) or after the consumer (valve in the supply line). The immersion sleeve required is supplied with the valve unit.

The temperature sensor is already wired with the valve.

Note

The cable between valve unit and temperature sensor may not be either shortened or lengthened.

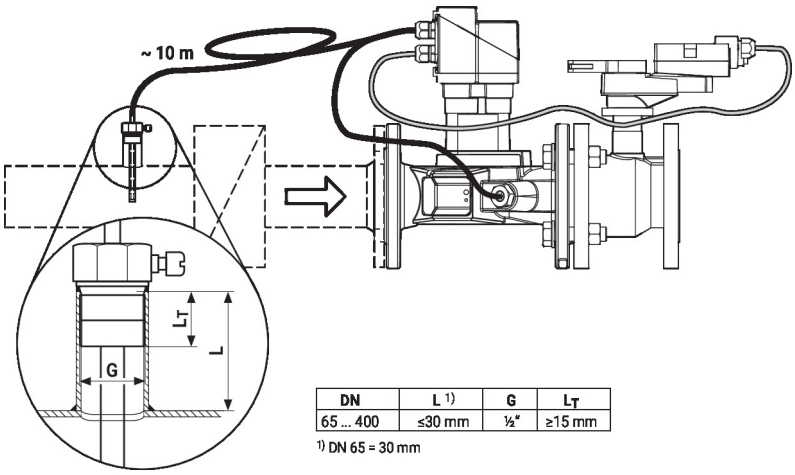

DN	L [1]	G	L_T
65 ... 400	≤30 mm	½"	≥15 mm

[1] DN 65 = 30 mm

Split installation

The valve-actuator combination may be mounted separately from the flow sensor. The direction of flow of both components must be observed.

General notes

Valve selection

The valve is determined using the maximum required flow rate V'max.

A calculation of the Kvs value is not required.

V'max = 30...100% of V'nom

If no hydronic data is available, the same valve DN can be selected as the heat exchanger nominal diameter.

Minimum differential pressure (pressure drop)

The minimum required differential pressure (pressure drop through the valve) for achieving the desired flow V'max can be calculated with the aid of the theoretical Kvs value (see type overview) and the below-mentioned formula. The calculated value is dependent on the required maximum flow V'max. Higher differential pressures are compensated for automatically by the valve.

Formula

$$\Delta p_{min} = 100 \times \left(\frac{V'_{max}}{K_{vs}\ \text{theor.}} \right)^2$$

Δp_{min}: kPa
V'_{max}: m³/h
K_{vs} theor.: m³/h

Example (DN 100 with the desired maximum flow rate = 50% V'nom)

EV100F+KBAC
K_{vs} theor. = 127 m³/h
V'_{nom} = 1200 l/min
50% x 1200 l/min = 600 l/min = 36 m³/h

$$\Delta p_{min} = 100 \times \left(\frac{V'_{max}}{K_{vs}\ \text{theor.}} \right)^2 = 100 \times \left(\frac{36\ m^3/h}{127\ m^3/h} \right)^2 = 8\ kPa$$

General notes

Behaviour in case of sensor failure

In case of a flow sensor error, the Energy Valve will switch from either power or flow control to position control (Delta-T manger will be deactivated).

Once the error disappears, the Energy Valve will switch back to the normal control setting (Delta-T manager activated)

Dimensions

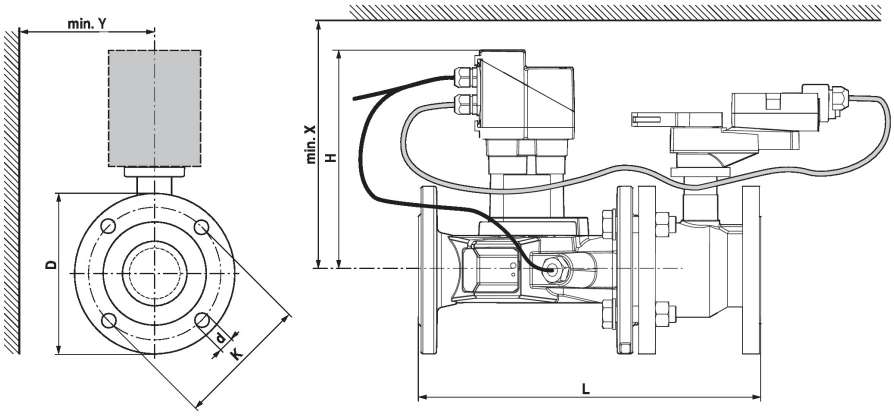

If Y <180 mm, the extension of the hand crank must be demounted as necessary.

Type	DN	L [mm]	H [mm]	D [mm]	d [mm]	K [mm]	X [mm]	Y [mm]	kg
EV065F+KBAC	65	379	243	185	4 x 19	145	265	150	26
EV080F+KBAC	80	430	250	200	8 x 19	160	270	160	32
EV100F+KBAC	100	474	252	230	8 x 19	180	275	175	46
EV125F+KBAC	125	579	259	255	8 x 19	210	280	190	60
EV150F+KBAC	150	651	269	285	8 x 23	240	290	200	74

Further documentation

- Tool connections
- BACnet Interface description
- Modbus Interface description
- Description Data-Pool Values
- Overview MP Cooperation Partners
- MP Glossary
- Introduction to MP-Bus Technology
- General notes for project planning
- Instruction Webserver