Globe valve, 2-way, Flange, PN 16

- For closed water systems
- For modulating control of air-handling and heating systems on the water side

Picture may differ from product

Type overview

Type	DN	Kvs [m³/h]	Stroke	PN	n(gl)	Sv min.
H611N	15	0.63	15 mm	16	3	50
H612N	15	1	15 mm	16	3	50
H613N	15	1.6	15 mm	16	3	50
H614N	15	2.5	15 mm	16	3	50
H615N	15	4	15 mm	16	3	50
H620N	20	6.3	15 mm	16	3	100
H625N	25	10	15 mm	16	3	100
H632N	32	16	15 mm	16	3	100
H640N	40	25	15 mm	16	3	100
H650N	50	40	15 mm	16	3	100
H664N	65	58	18 mm	16	3	100
H665N	65	63	30 mm	16	3	100
H679N	80	90	18 mm	16	3	100
H680N	80	100	30 mm	16	3	100
H6100N	100	145	30 mm	16	3	100

Technical data

Functional data	Fluid	Water, water with glycol up to max. 50% vol.
	Fluid temperature	-10...120°C [14...248°F]
	Fluid temperature note	At a fluid temperature of -10...2°C, a spindle heating is needed.
	Flow characteristic	equal percentage (VDI/VDE 2173), optimised in the opening range
	Leakage rate	max. 0.05% of the Kvs value
	Closing point	Top (▲)
	Pipe connection	Flange according to ISO 7005-2
	Installation orientation	upright to horizontal (in relation to the spindle)
	Servicing	maintenance-free
Materials	Valve body	EN-GJL-250 (GG 25)
	Body finish	with protective paint
	Closing element	Stainless steel
	Spindle	Stainless steel
	Spindle seal	EPDM O-ring

Technical data

Materials	Seat	GG25 / Niro (Bypass)

Safety notes

- The valve has been designed for use in stationary heating, ventilation and air-conditioning systems and must not be used outside the specified field of application, especially in aircraft or in any other airborne means of transport.
- Only authorised specialists may carry out installation. All applicable legal or institutional installation regulations must be complied with during installation.
- The valve does not contain any parts that can be replaced or repaired by the user.
- The valve may not be disposed of as household refuse. All locally valid regulations and requirements must be observed.
- When determining the flow rate characteristic of controlled devices, the recognised directives must be observed.

Product features

Operating mode

The globe valve is adjusted by a globe valve actuator. The actuators are connected by a commercially available modulating or 3-point control system and move the valve cone, which acts as a throttling device, into the opening position dictated by the control signal.

Flow characteristic

An equal percentage flow characteristic is produced by the profile of the valve cone.

Fluid velocity

Standard values for low-noise operation in HVAC systems are fluid velocities of 1...2 m/s. At fluid velocities above 2 m/s, further flow effects like noise as well as cavitation can occur. This can reduce the service life of a valve depending on the situation.

Accessories

Electrical accessories

Description	Type
Stem heater for LV.., NV.., SV.. actuator	ZH24-1-A
Stem heater for valves DN 65...250, AC/DC 24 V, 60 W	ZH24-1-B

Installation notes

Permissible installation orientation

The globe valve may be mounted upright to horizontal. It is not permissible to mount the globe valves with the stem pointing downwards.

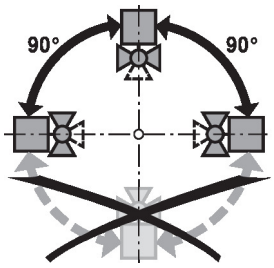

Water quality requirements

The water quality requirements specified in VDI 2035 must be adhered to.

Belimo valves are regulating devices. For the valves to function correctly in the long term, they must be kept free from particle debris (e.g. welding beads during installation work). The installation of a suitable strainer is recommended.

Installation notes

Servicing

Globe valves and globe valve actuators are maintenance-free.

Before any service work on the control element is carried out, it is essential to isolate the globe valve actuator from the power supply (by unplugging the electrical cables if necessary). Any pumps in the part of the piping system concerned must also be switched off and the appropriate slide valves closed (allow all components to cool down first if necessary and always reduce the system pressure to ambient pressure level).

The system must not be returned to service until the globe valve and the globe valve actuator have been reassembled correctly in accordance with the instructions and the pipeline has been refilled by professionally trained personnel.

Flow direction

The direction of flow, specified by an arrow on the housing, is to be complied with, since otherwise the valve could become damaged.

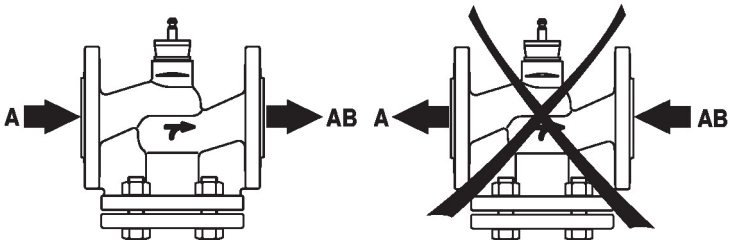

Differential and close-off pressure

The maximum differential and close-off pressure of globe valves depends on the mounted globe valve actuator. To ensure optimum operation and maximum service life, the maximum differential and close-off pressure in the table below must not be exceeded.

ps <1600 kPa (PN16) t= +5... +120°C		LV..A.. 500N		NV..A.. 1000N		SV..A.. 1500N		AVK..A.. 2000N		EV..A.. 2500N		RV..A.. 4500N	
A AB	DN	Δps [kPa]	Δpmax [kPa]	Δps [kPa]	Δpmax [kPa]	Δps [kPa]	Δpmax [kPa]	Δps [kPa]	Δpmax [kPa]	Δps [kPa]	Δpmax [kPa]	Δps [kPa]	Δpmax [kPa]
H611N ... 15N	15	1300	400	1600	400	1600	400						
H620N	20	900	400	1600	400	1600	400						
H625N	25	500	400	1300	400	1600	400						
H632N	32	350	350	1000	400	1600	400						
H640N	40	150	150	500	400	900	400						
H650N	50	70	70	300	300	550	400						
H664N	65			140	140	280	280						
H665N	65							400	400	550	400	1100	400
H679N	80			80	80	160	160						
H680N	80							250	250	350	350	700	400
H6100N	100							150	150	200	200	450	400

Dimensions

Dimensional drawings

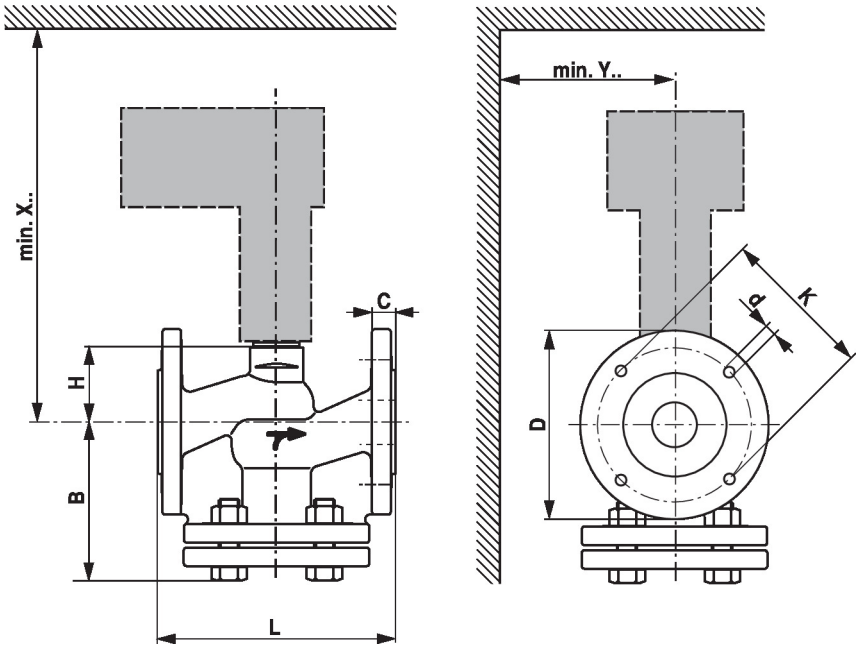

X/Y: Minimum distance with respect to the valve centre.
The actuator dimensions can be found on the respective actuator data sheet.

Type	DN	L [mm]	B [mm]	H [mm]	C [mm]	D [mm]	d [mm]	K [mm]	X [mm]	Y [mm]	kg
H611N	15	130	89	46	14	95	4 x 14	65	290	100	4.2
H612N	15	130	89	46	14	95	4 x 14	65	290	100	4.2
H613N	15	130	89	46	14	95	4 x 14	65	290	100	4.2
H614N	15	130	89	46	14	95	4 x 14	65	290	100	4.2
H615N	15	130	89	46	14	95	4 x 14	65	290	100	4.7
H620N	20	150	96	46	16	105	4 x 14	75	290	100	5.9
H625N	25	160	101	52	16	115	4 x 14	85	300	100	7.6
H632N	32	180	123	56	18	140	4 x 18	100	300	100	11
H640N	40	200	128	64	18	150	4 x 18	110	310	100	13
H650N	50	230	130	64	20	165	4 x 18	125	310	100	18
H664N	65	290	150	100	20	185	4 x 18	145	350	100	25
H665N	65	290	150	100	20	185	4 x 18	145	450	150	24
H679N	80	310	162	110	22	200	8 x 18	160	360	150	30
H680N	80	310	162	110	22	200	8 x 18	160	460	150	30
H6100N	100	350	182	125	24	220	8 x 18	180	480	150	41

Further documentation

- The complete product range for water applications
- Data sheets for globe valve actuators
- Installation instructions for valves and/or globe valve actuators
- Notes for project planning 2-way and 3-way globe valves