Globe valve, 3-way, Flange, PN 16

- For closed water systems
- For modulating control of air-handling and heating systems on the water side

Picture may differ from product

Type overview

Type	DN	Kvs [m³/h]	Stroke	PN	n(gl)	Sv min.
H715S	15	4	20 mm	16	3	50
H720S	20	6.3	20 mm	16	3	100
H725S	25	10	20 mm	16	3	100
H732S	32	16	20 mm	16	3	100
H740S	40	25	20 mm	16	3	100
H750S	50	40	20 mm	16	3	100
H765S	65	63	30 mm	16	3	100
H780S	80	100	30 mm	16	3	100
H7100S	100	160	30 mm	16	3	100
H7125S	125	220	40 mm	16	3	100
H7150S	150	320	40 mm	16	3	100

Technical data

Functional data	Fluid	Water, water with glycol up to max. 50% vol.
	Fluid temperature	5...150°C [41...302°F]
	Fluid temperature note	120°C up to 1600 kPa 150°C up to 1400 kPa
	Flow characteristic	Control path A – AB: equal percentage (VDI/VDE 2173), optimised in the opening range, Bypass B – AB: linear (VDI/VDE 2173)
	Leakage rate	Control path A – AB: max. 0.05% of the Kvs value; Bypass B – AB: max. 1% of the Kvs value
	Closing point	Top (▲)
	Pipe connection	Flange according to ISO 7005-2
	Installation orientation	upright to horizontal (in relation to the spindle)
	Servicing	maintenance-free
Materials	Valve body	EN-GJL-250 (GG 25)
	Body finish	with protective paint
	Closing element	Stainless steel
	Spindle	Stainless steel
	Spindle seal	PTFE V-ring
	Seat	Stainless steel

Safety notes

- The valve has been designed for use in stationary heating, ventilation and air-conditioning systems and must not be used outside the specified field of application, especially in aircraft or in any other airborne means of transport.
- Only authorised specialists may carry out installation. All applicable legal or institutional installation regulations must be complied with during installation.
- The valve does not contain any parts that can be replaced or repaired by the user.
- The valve may not be disposed of as household refuse. All locally valid regulations and requirements must be observed.
- When determining the flow rate characteristic of controlled devices, the recognised directives must be observed.

Product features

Operating mode

The globe valve is adjusted by a globe valve actuator. The actuators are controlled by a commercially available modulating or 3-point control system and move the valve cone, which acts as a mixing device, to the opening position dictated by the control signal.

Flow characteristic

An equal percentage flow characteristic in the flow direction is produced by the profile of the valve cone. The bypass exhibits a linear characteristic curve.

Fluid velocity

Standard values for low-noise operation in HVAC systems are fluid velocities of 1...2 m/s. At fluid velocities above 2 m/s, further flow effects like noise as well as cavitation can occur. This can reduce the service life of a valve depending on the situation.

Accessories

Electrical accessories

Description	Type
Stem heater for LV.., NV.., SV.. actuator	ZH24-1-A

Installation notes

Permissible installation orientation

The globe valve may be mounted upright to horizontal. It is not permissible to mount the globe valves with the stem pointing downwards.

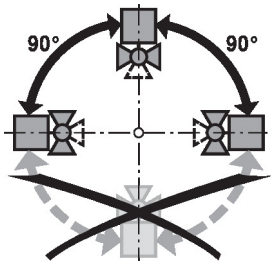

Water quality requirements

The water quality requirements specified in VDI 2035 must be adhered to.

Belimo valves are regulating devices. For the valves to function correctly in the long term, they must be kept free from particle debris (e.g. welding beads during installation work). The installation of a suitable strainer is recommended.

Servicing

Globe valves and globe valve actuators are maintenance-free.

Before any service work on the control element is carried out, it is essential to isolate the globe valve actuator from the power supply (by unplugging the electrical cables if necessary). Any pumps in the part of the piping system concerned must also be switched off and the appropriate slide valves closed (allow all components to cool down first if necessary and always reduce the system pressure to ambient pressure level).

The system must not be returned to service until the globe valve and the globe valve actuator have been reassembled correctly in accordance with the instructions and the pipeline has been refilled by professionally trained personnel.

Installation notes

Flow direction

The valve can be used as mixing valve A+B to AB and as diverting valve AB to A+B. The maximum pressure values are lower in diverting mode than in mixed mode (see mounting instructions).

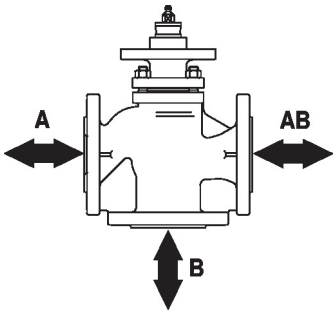

Differential and close-off pressure

The maximum differential and close-off pressure of globe valves depends on the mounted globe valve actuator. To ensure optimum operation and maximum service life, the maximum differential and close-off pressure in the table below must not be exceeded.

Mixing

p_s <1600 kPa (PN16) t= 5... 120°C p_s <1400 kPa (PN16) t= 121... 150°C		NV..A.. 1000N		SV..A.. 1500N		AVK..A.. 2000N		EV..A.. 2500N		RV..A.. 4500N	
	DN	Δps [kPa]	Δpmax [kPa]	Δps [kPa]	Δpmax [kPa]	Δps [kPa]	Δpmax [kPa]	Δps [kPa]	Δpmax [kPa]	Δps [kPa]	Δpmax [kPa]
H715S	15	1600	1000	1600	1000						
H720S	20	1600	1000	1600	1000						
H725S	25	1300	1000	1600	1000						
H732S	32	900	900	1500	1000						
H740S	40	500	500	800	800						
H750S	50	300	300	500	500						
H765S	65					400	400	500	500	1100	1000
H780S	80					250	250	350	350	700	700
H7100S	100					150	150	200	200	450	450
H7125S	125							135	135	310	310
H7150S	150							90	90	220	220

Diverting

p_s <1600 kPa (PN16) t= 5... 120°C p_s <1400 kPa (PN16) t= 121... 150°C		NV..A.. 1000N		SV..A.. 1500N		AVK..A.. 2000N		EV..A.. 2500N		RV..A.. 4500N	
	DN	Δps [kPa]	Δpmax [kPa]	Δps [kPa]	Δpmax [kPa]	Δps [kPa]	Δpmax [kPa]	Δps [kPa]	Δpmax [kPa]	Δps [kPa]	Δpmax [kPa]
H715S	15	400	250	400	250						
H720S	20	400	250	400	250						
H725S	25	325	250	400	250						
H732S	32	225	225	375	250						
H740S	40	125	125	200	200						
H750S	50	75	75	125	125						
H765S	65					100	100	125	125	275	275
H780S	80					63	63	88	88	175	175
H7100S	100					38	38	50	50	113	113
H7125S	125							34	34	78	78
H7150S	150							23	23	55	55

Dimensions

Dimensional drawings

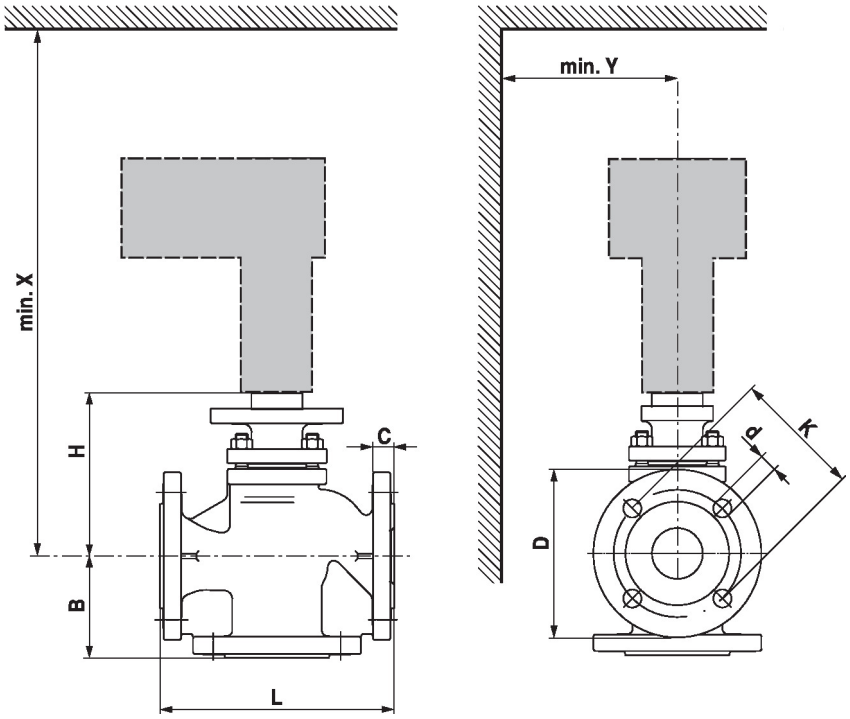

X/Y: Minimum distance with respect to the valve centre.
The actuator dimensions can be found on the respective actuator data sheet.

Type	DN	L [mm]	B [mm]	H [mm]	C [mm]	D [mm]	d [mm]	K [mm]	X [mm]	Y [mm]	kg
H715S	15	130	65	116	14	95	4 x 14	65	370	100	5.1
H720S	20	150	70	115	16	105	4 x 14	75	370	100	6.1
H725S	25	160	75	131	16	115	4 x 14	85	390	100	7.1
H732S	32	180	80	157	18	140	4 x 18	100	420	100	9.7
H740S	40	200	90	162	18	150	4 x 18	110	430	100	13
H750S	50	230	100	160	20	165	4 x 18	125	430	100	17
H765S	65	290	120	199	20	185	4 x 18	145	550	150	24
H780S	80	310	130	215	22	200	8 x 18	160	570	150	30
H7100S	100	350	150	234	24	220	8 x 18	180	590	150	47
H7125S	125	400	200	281	27	250	8 x 18	210	640	180	67
H7150S	150	480	210	343	27	285	8 x 22	240	680	215	91

Further documentation

- The complete product range for water applications
- Data sheets for globe valve actuators
- Installation instructions for valves and/or globe valve actuators
- Notes for project planning 2-way and 3-way globe valves