72178-00001.D

i

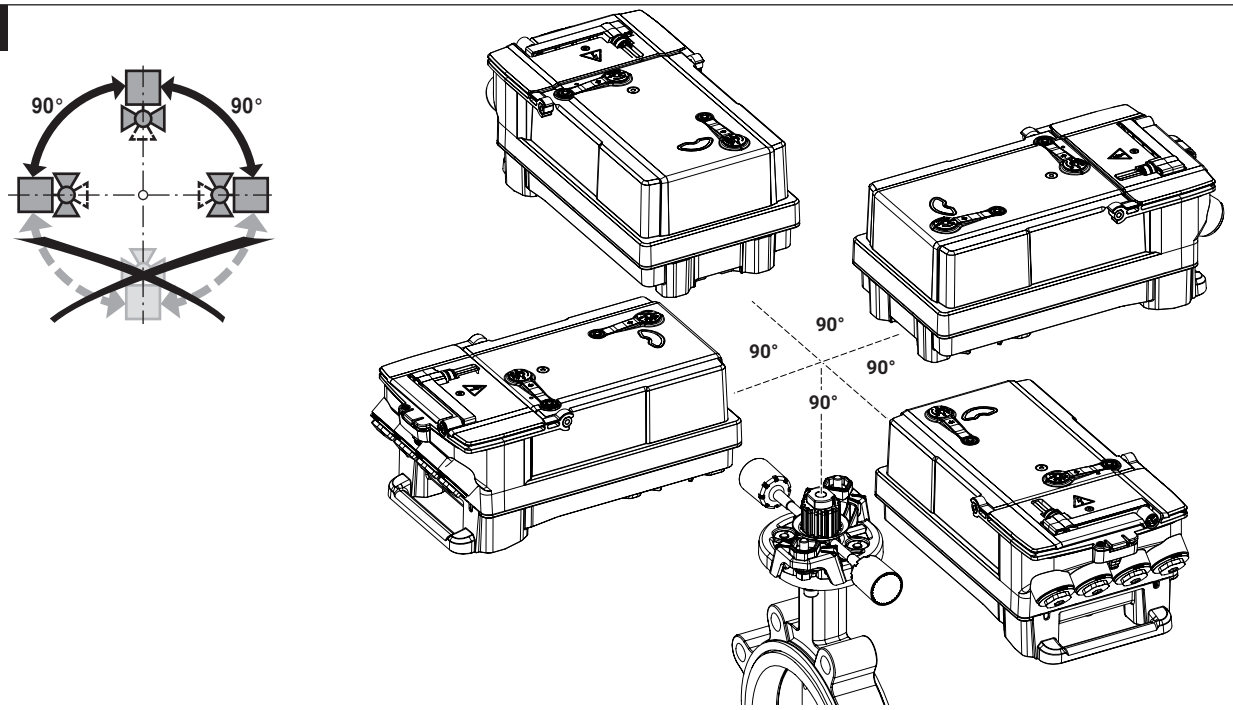

1

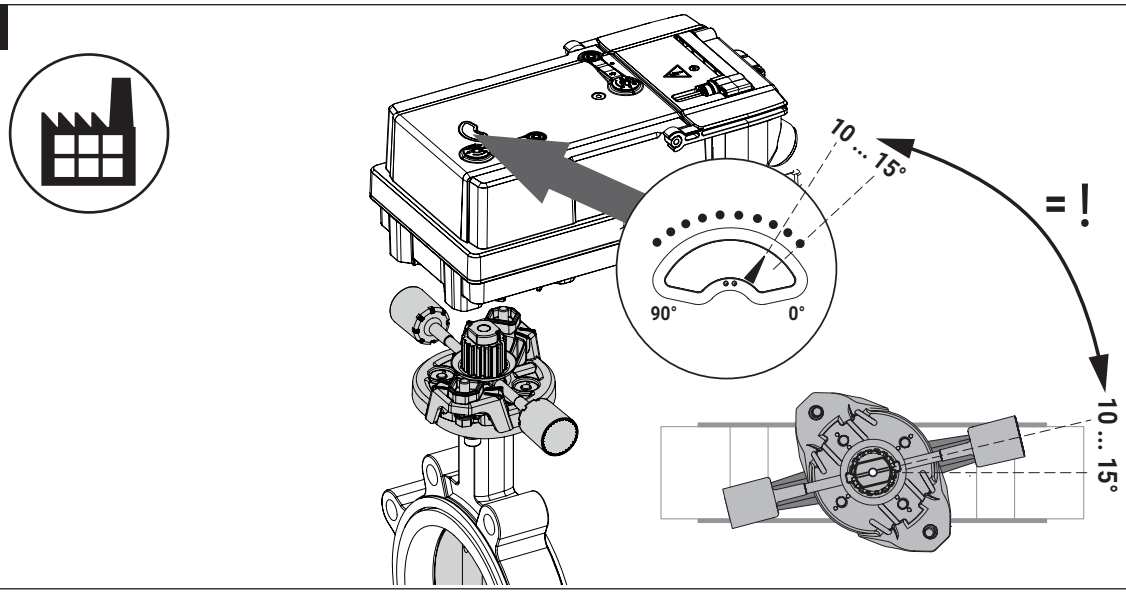

2

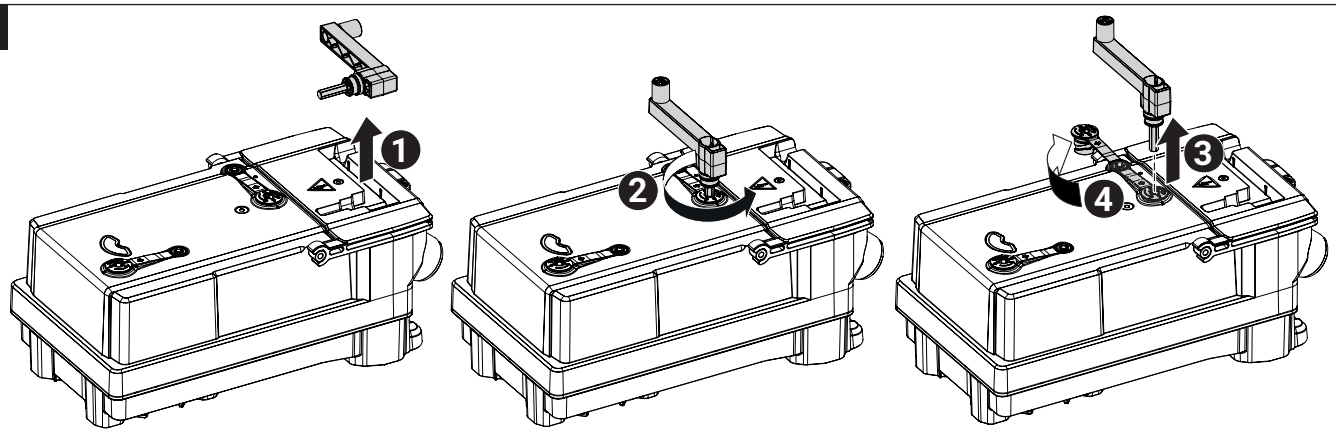

www.belimo.eu/safety

3

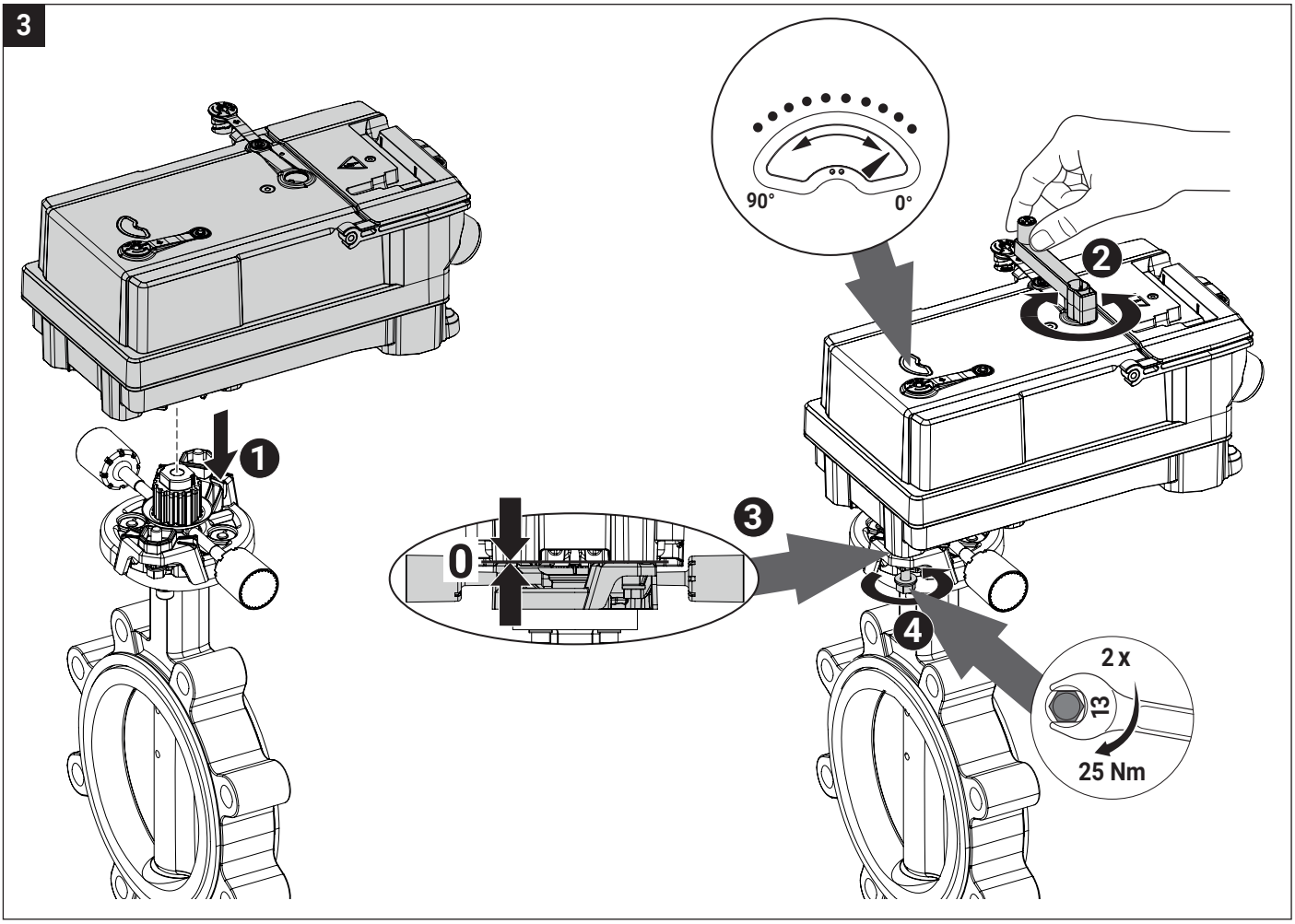

4

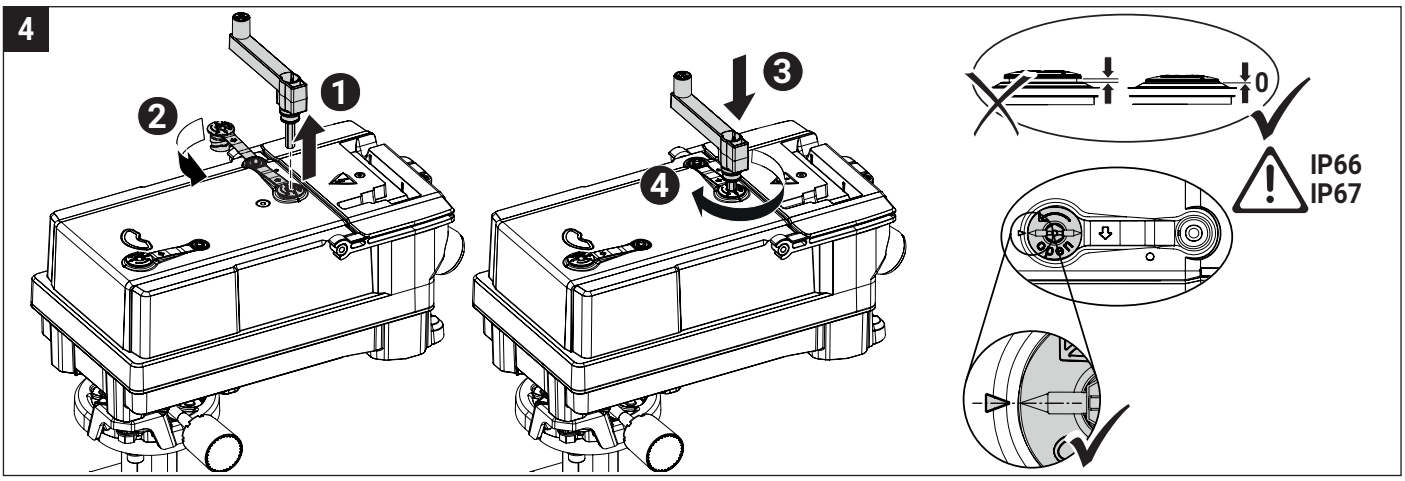

i

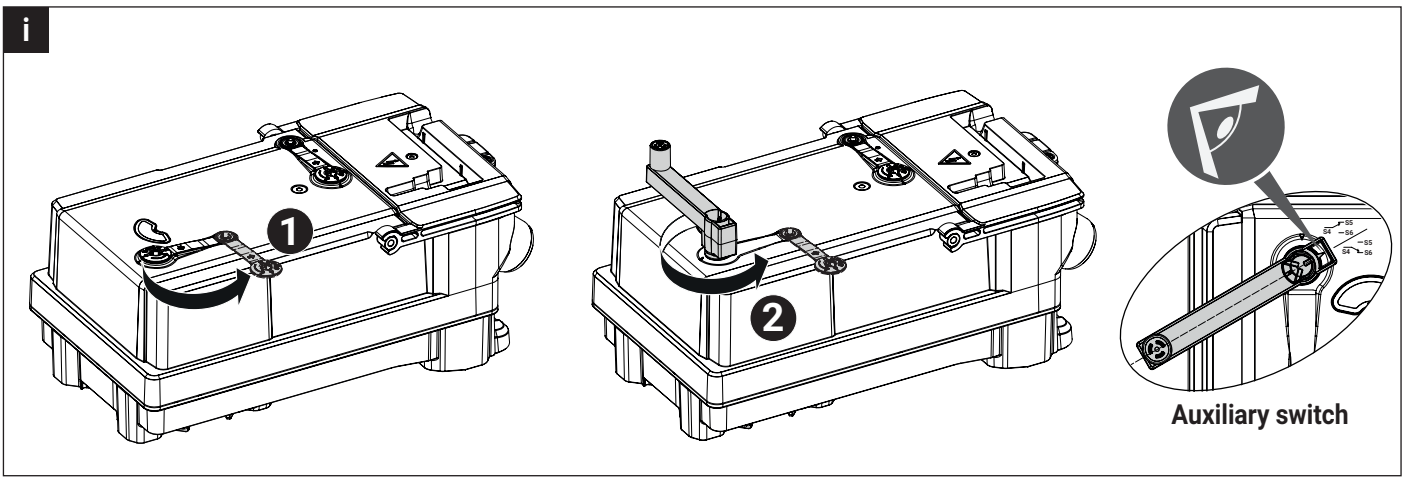

5

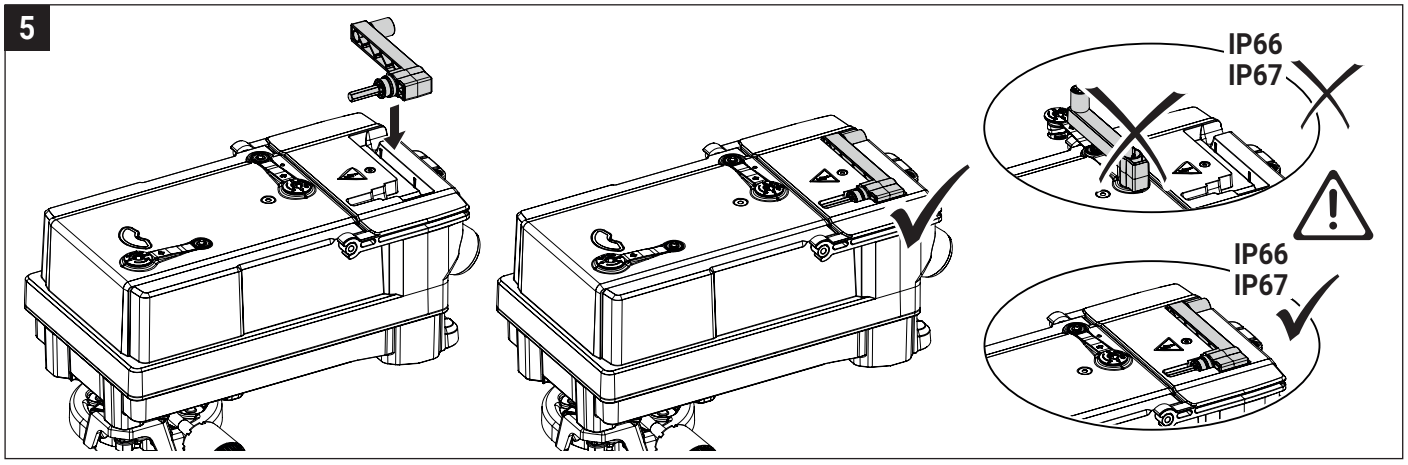
IP66
IP67
IP66
IP67

6

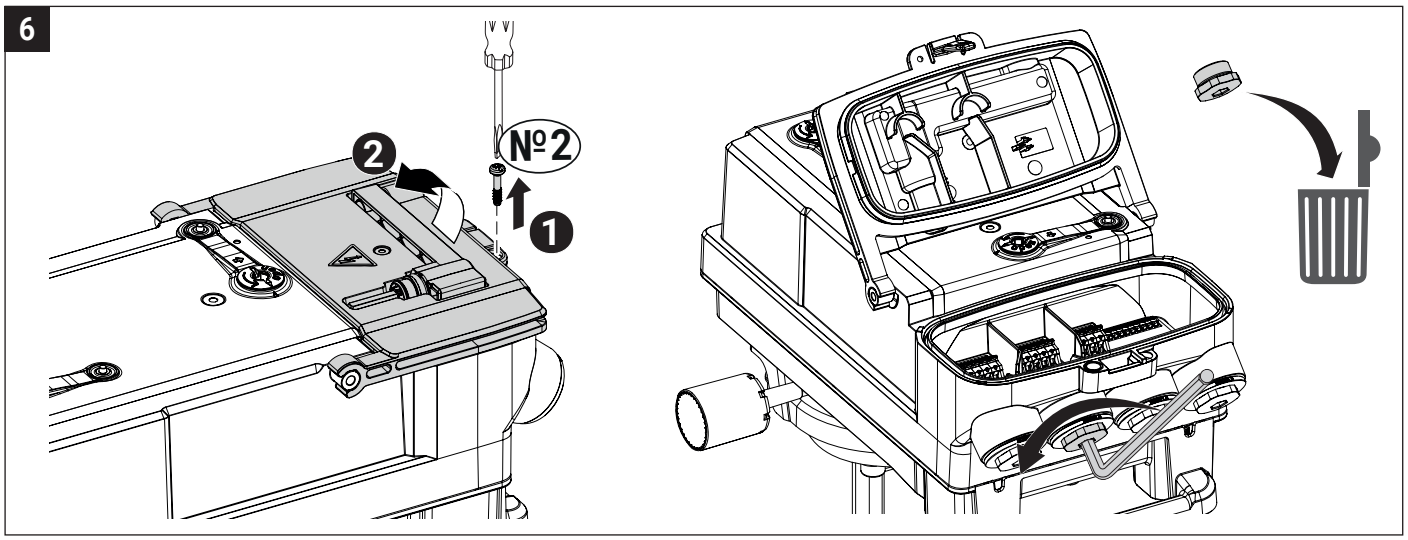
№2
2
1

7

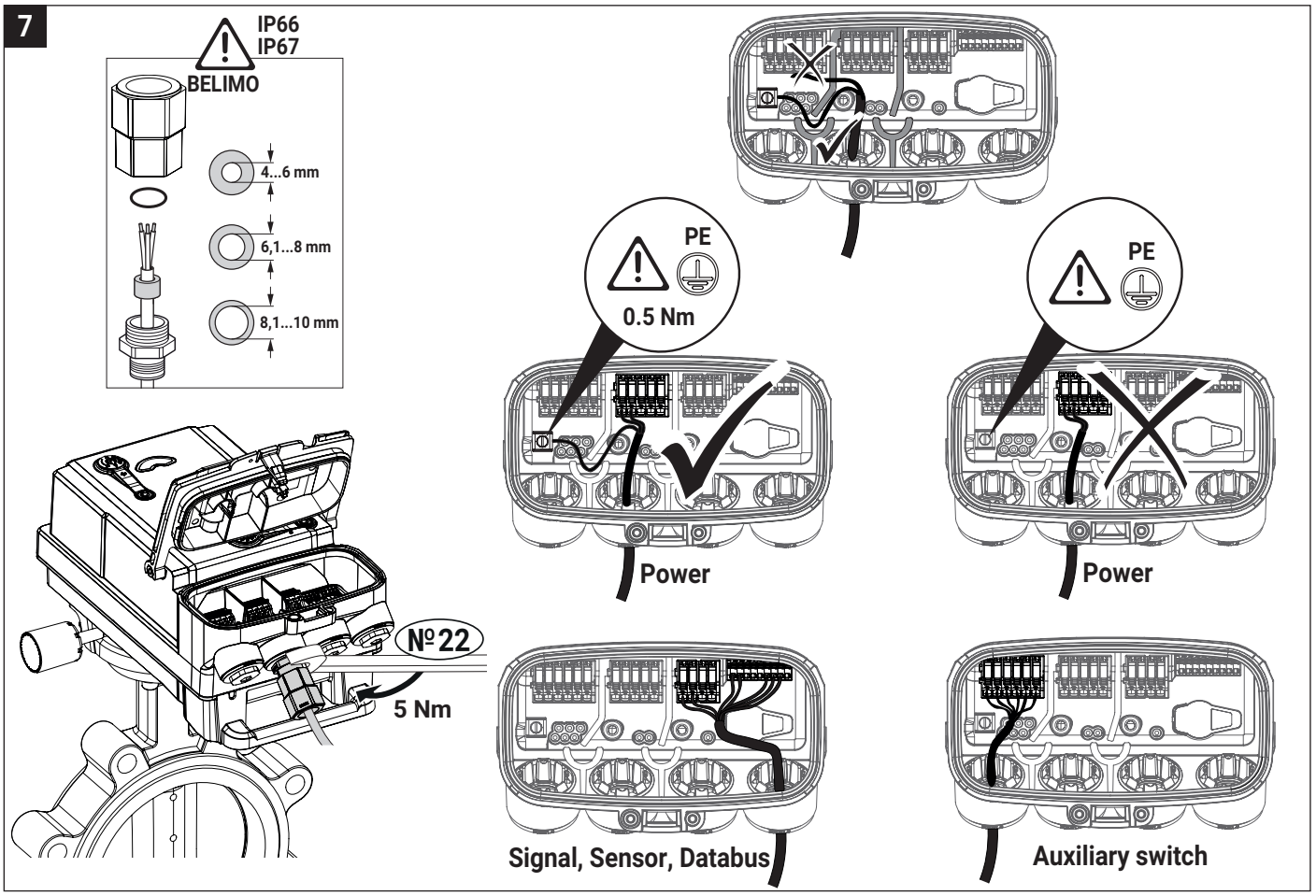
IP66
IP67
BELIMO
4...6 mm
6,1...8 mm
8,1...10 mm
PE
0.5 Nm
PE
Power
Power
№22
5 Nm
Signal, Sensor, Databus
Auxiliary switch

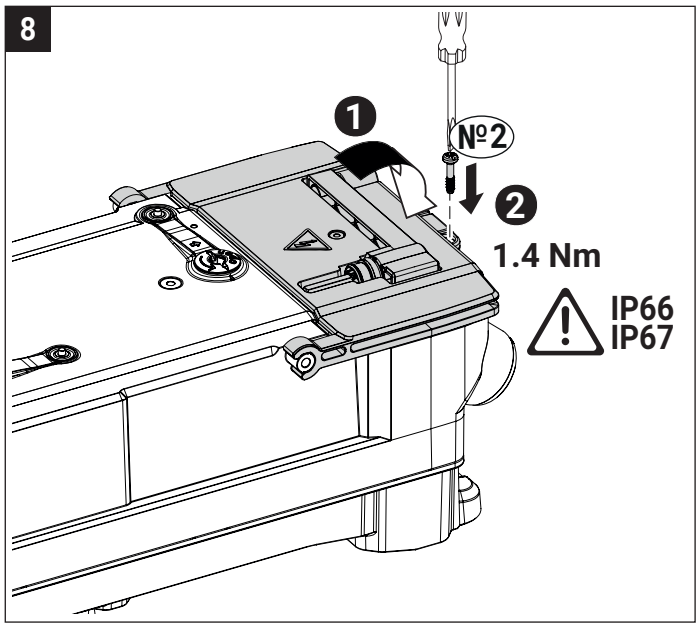

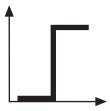

AC 24...240 V
DC 24...125 V

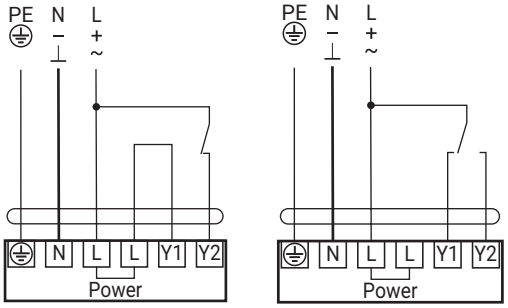

JRCA-S2-T
JR(K)CA-BAC-S2-T

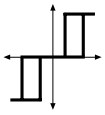

AC 24...240 V
DC 24...125 V

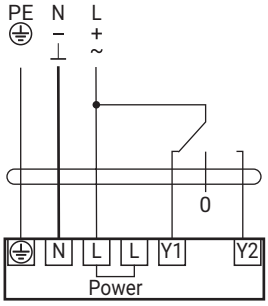

JRCA-S2-T
JR(K)CA-BAC-S2-T

Connection auxiliary switch

230 V + 230 V
24 V + 24 V ✓

~~230 V + 24 V~~
~~24 V + 230 V~~

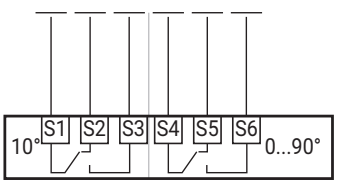

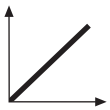

AC 24...240 V
DC 24...125 V

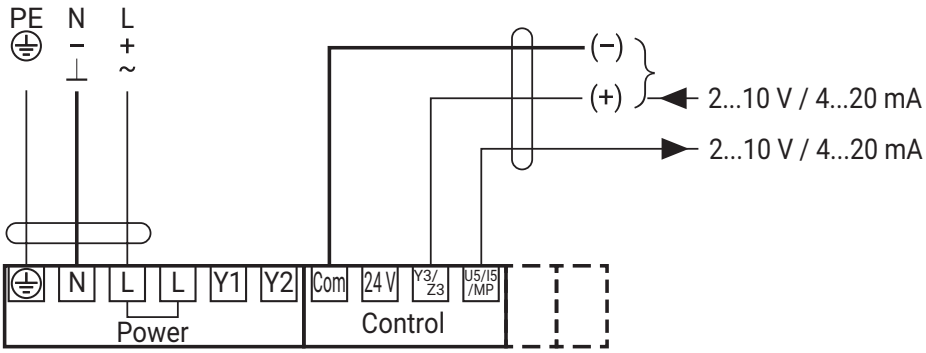

JR(K)CA-BAC-S2-T

MP-Bus

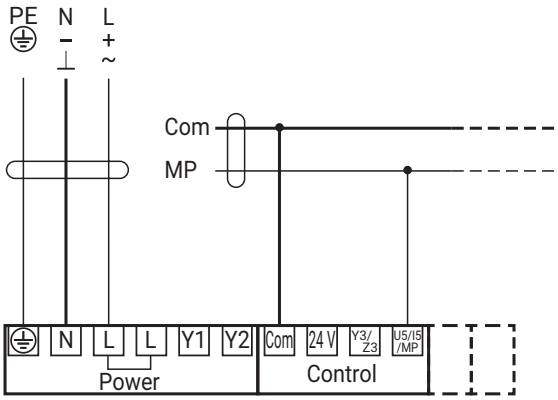

BACnet MS/TP / Modbus RTU

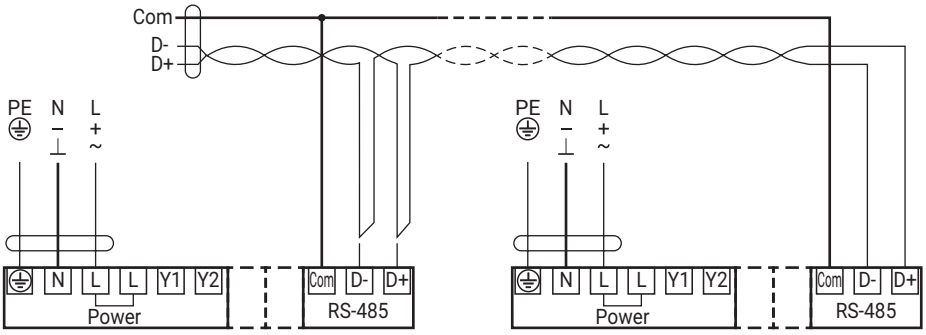

BACnet MS/TP / Modbus RTU / analog

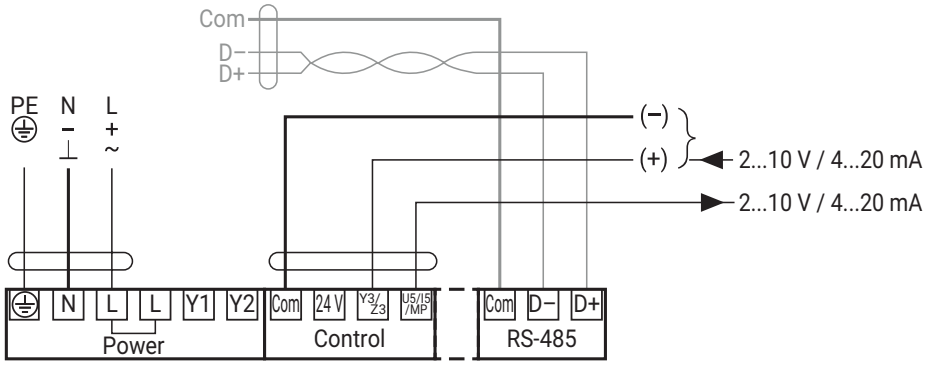

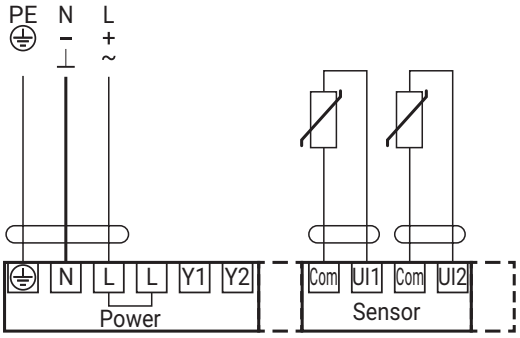
PE
N
L
N
L
L
Y1
Y2
Com
UI1
Com
UI2
Power
Sensor

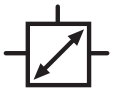

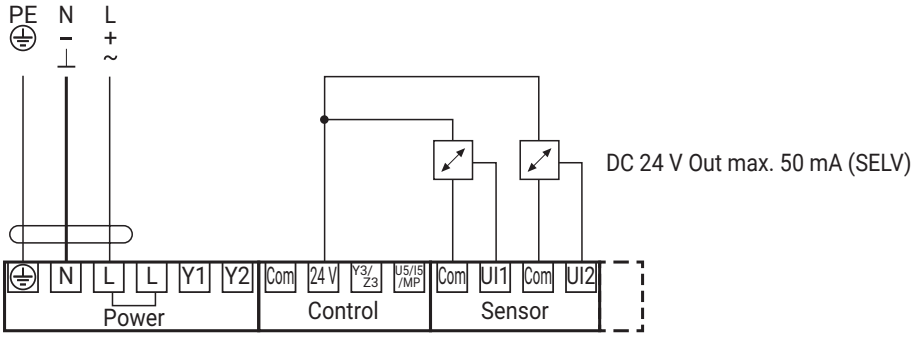
PE
N
L
N
L
L
Y1
Y2
Com
24 V
Y3/Z3
U5/I5/MP
Com
UI1
Com
UI2
Power
Control
Sensor
DC 24 V Out max. 50 mA (SELV)

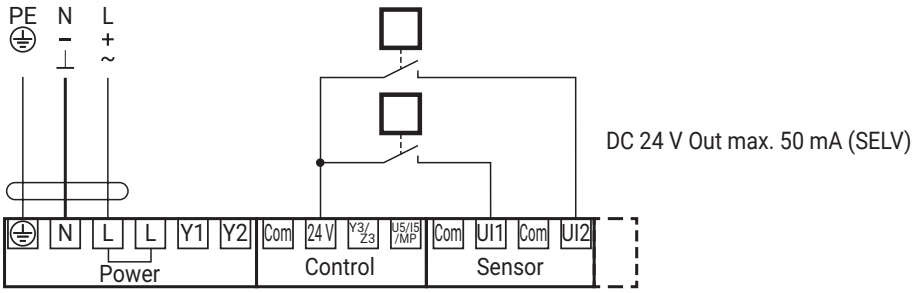
PE
N
L
N
L
L
Y1
Y2
Com
24 V
Y3/Z3
U5/I5/MP
Com
UI1
Com
UI2
Power
Control
Sensor
DC 24 V Out max. 50 mA (SELV)

BELIMO
NFC
Available on the App Store
GET IT ON Google Play
max. flow velocity 4 m/s

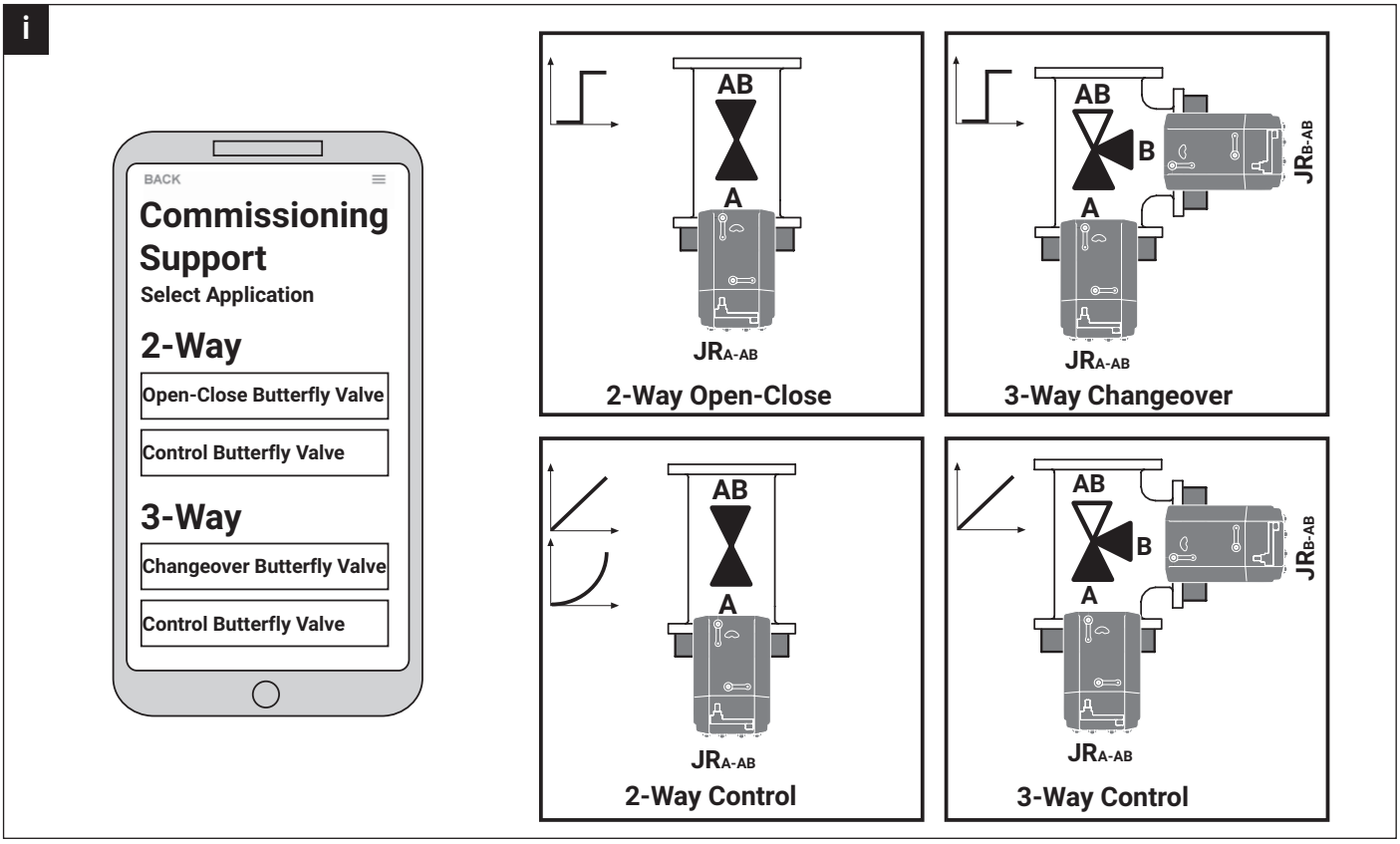
i
BACK
Commissioning Support
Select Application
2-Way
Open-Close Butterfly Valve
Control Butterfly Valve
3-Way
Changeover Butterfly Valve
Control Butterfly Valve
AB
A
JRA-AB
2-Way Open-Close
AB
B
A
JRA-AB
JRB-AB
3-Way Changeover
AB
A
JRA-AB
2-Way Control
AB
B
A
JRA-AB
JRB-AB
3-Way Control

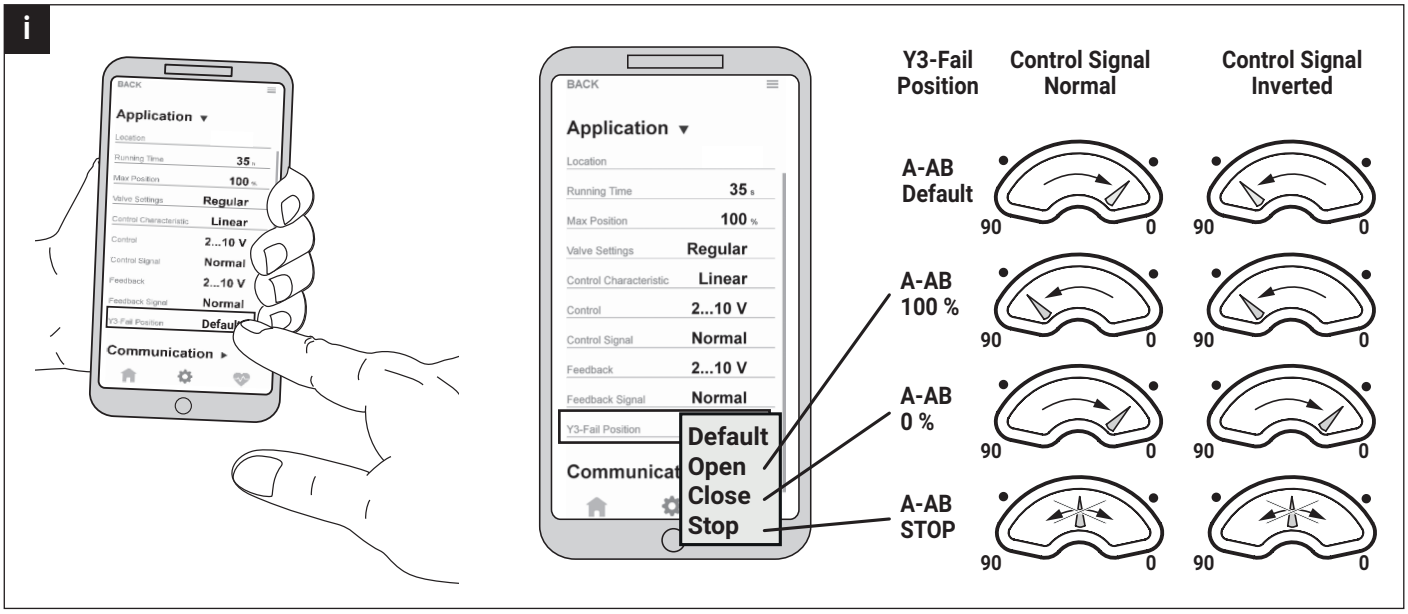
i
BACK
Application
Location
Running Time 35 s
Max Position 100 %
Valve Settings Regular
Control Characteristic Linear
Control 2...10 V
Control Signal Normal
Feedback 2...10 V
Feedback Signal Normal
Y3-Fail Position Default
Communication
Y3-Fail Position
Default
Open
Close
Stop
Control Signal Normal
Control Signal Inverted
A-AB Default
A-AB 100 %
A-AB 0 %
A-AB STOP
90
0