Rotary actuator fail-safe for adjusting dampers in technical building installations

- Air damper size up to approx. 0.5 m²
- Torque motor 2.5 Nm
- Nominal voltage AC/DC 24 V
- Control Open/close
- with integrated auxiliary switch

Picture may differ from product

Technical data

Electrical data	Nominal voltage	AC/DC 24 V
	Nominal voltage frequency	50/60 Hz
	Nominal voltage range	AC 19.2...28.8 V / DC 21.6...28.8 V
	Power consumption in operation	2.5 W
	Power consumption in rest position	1.5 W
	Power consumption for wire sizing	5 VA
	Auxiliary switch	1x SPDT, 0...100%
	Auxiliary switch note	0...100%
	Switching capacity auxiliary switch	1 mA...3 A (0.5 A inductive), DC 5 V...AC 250 V
	Connection supply / control	Cable 1 m, 2x 0.75 mm²
	Connection auxiliary switch	Cable 1 m, 3x 0.75 mm²
	Parallel operation	Yes (note the performance data)
Functional data	Torque motor	2.5 Nm
	Torque fail-safe	2.5 Nm
	Direction of motion motor	selectable by mounting L/R
	Direction of motion fail-safe	selectable by mounting L/R
	Manual override	No
	Angle of rotation	Max. 95°
	Angle of rotation note	adjustable starting at 37% in 2.5% steps (with mechanical end stop)
	Running time motor	75 s / 90°
	Running time fail-safe	<25 s / 90°
	Sound power level, motor	50 dB(A)
	Mechanical interface	Universal shaft clamp 6...12.7 mm
	Position indication	Mechanical
	Service life	Min. 60'000 fail-safe positions
Safety data	Protection class IEC/EN	III, Safety Extra-Low Voltage (SELV)
	Protection class auxiliary switch IEC/EN	II, reinforced insulation
	Degree of protection IEC/EN	IP42
	EMC	CE according to 2014/30/EU
	Low voltage directive	CE according to 2014/35/EU
	Certification IEC/EN	IEC/EN 60730-1 and IEC/EN 60730-2-14
	Hygiene test	According to VDI 6022 Part 1
	Type of action	Type 1.AA.B
	Rated impulse voltage supply / control	0.8 kV
	Rated impulse voltage auxiliary switch	2.5 kV
	Pollution degree	3
	Ambient humidity	Max. 95% RH, non-condensing

Technical data

Safety data	Ambient temperature	-30...50°C [-22...122°F]
	Storage temperature	-40...80°C [-40...176°F]
	Servicing	maintenance-free
Weight	Weight	0.71 kg

Safety notes

- This device has been designed for use in stationary heating, ventilation and air-conditioning systems and must not be used outside the specified field of application, especially in aircraft or in any other airborne means of transport.
- Outdoor application: Only possible if no (sea) water, snow, ice, sunlight or aggressive gases act directly on the device and if it is ensured that the ambient conditions remain within the limit values specified in the data sheet at all times.
- Only authorised specialists may carry out installation. All applicable legal or institutional installation regulations must be complied with during installation.
- The device may only be opened at the manufacturer's site. It does not contain any parts that can be replaced or repaired by the user.
- Cables must not be removed from the device.
- The device contains electrical and electronic components and must not be disposed of as household refuse. All locally valid regulations and requirements must be observed.

Product features

Operating mode
The actuator moves the damper to the operating position at the same time as tensioning the return spring. The damper is turned back to the safety position by spring energy when the supply voltage is interrupted.

Simple direct mounting
Simple direct mounting on the damper shaft with a universal shaft clamp, supplied with an anti-rotation mechanism to prevent the actuator from rotating.

Adjustable angle of rotation
Adjustable angle of rotation with mechanical end stops.

High functional reliability
The actuator is overload protected, requires no limit switches and automatically stops when the end stop is reached.

Flexible signalling
With adjustable auxiliary switch (0...100%)

Accessories

Mechanical accessories

Description	Type
Actuator arm	AH-TF
Shaft extension 170 mm ø10 mm for damper shaft ø6...16 mm	AV6-20
Ball joint suitable for damper crank arm KH8 / KH10	KG10A
Ball joint suitable for damper crank arm KH8	KG8
Damper crank arm Slot width 8.2 mm, clamping range ø10...18 mm	KH8
Screw fastening kit	SB-TF
Angle of rotation limiter, with end stop	ZDB-TF
Form fit adapter 8x8 mm	ZF8-TF
Mounting kit for linkage operation for flat and side installation	ZG-TF1
Anti-rotation mechanism 180 mm, Multipack 20 pcs.	Z-ARS180

Electrical installation

Supply from isolating transformer.

Parallel connection of other actuators possible. Observe the performance data.

The cable cross-section (mm²) must be determined on the basis of the actuator performance data (VA, W), the cable resistance, the number of actuators, and the total cable length according to electrotechnical principles. High voltage drops across the installation cables can affect the function of the actuator if, for example, the nominal voltage range (AC/DC) is not respected.

Wire colours:
1 = black
2 = red
S1 = violet
S2 = red
S3 = white

AC/DC 24 V, open/close

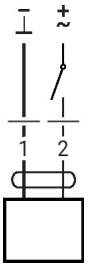

Auxiliary switch

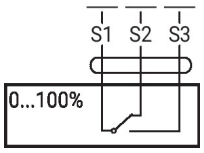

Dimensions

Shaft length

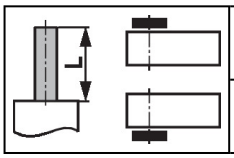	Min. 84
	Min. 20 mm [0.75"]

Clamping range
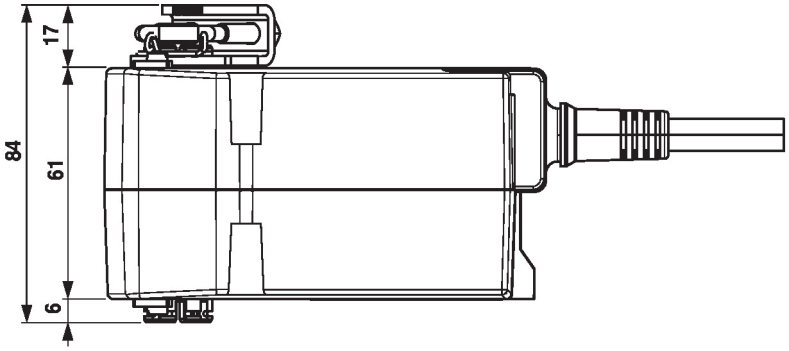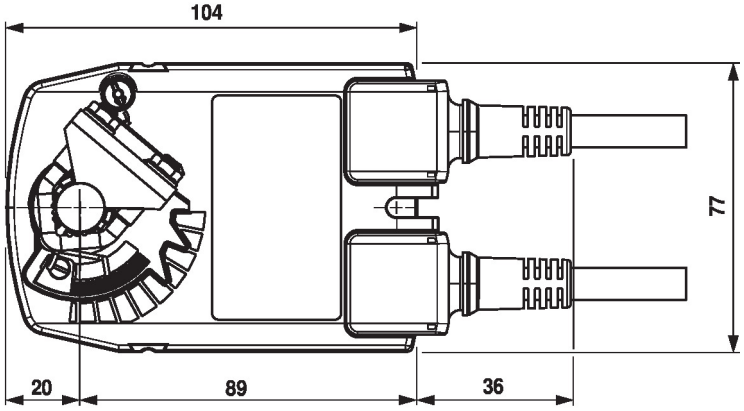
6...12.7	6...12.7