Modulating linear actuator for factory installation in an equipment in technical building installations

- Actuating force 50 N
- Nominal voltage AC/DC 24 V
- Control modulating
- Length of Stroke Max. 60 mm, adjustable in 1 mm increments

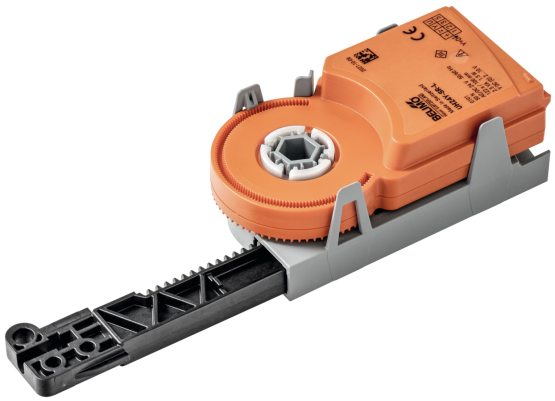

Technical data

Electrical data	Nominal voltage	AC/DC 24 V
	Nominal voltage frequency	50/60 Hz
	Nominal voltage range	AC 19.2...28.8 V / DC 19.2...28.8 V
	Power consumption in operation	1.5 W
	Power consumption in rest position	0.5 W
	Power consumption for wire sizing	2.5 VA
	Connection supply / control	Connector plug (Cable-side connector socket not included in scope of delivery)
	Connection plug	Molex Mini-Fit Jr. 39303045
	Parallel operation	Yes (note the performance data)
Functional data	Actuating force motor	50 N
	Operating range Y	2...10 V
	Input impedance	100 kΩ
	Position feedback U	2...10 V
	Position feedback U note	Max. 1 mA
	Position accuracy	±5%
	Direction of motion motor	counter-clockwise rotation
	Direction of motion note	Y = 0 V: left end stop, position 0
	Manual override	No
	Stroke	60 mm
	Length of Stroke	Max. 60 mm, adjustable in 1 mm increments
	Stroke limitation	can be limited on both sides with mechanical end stops adjustable in 1 mm increments between 30...60mm
	Running time motor	122 s / 100 mm
	Running time motor note	corresponds to 74 s / 60 mm
	Sound power level, motor	35 dB(A)
Safety data	Protection class IEC/EN	III, Safety Extra-Low Voltage (SELV)
	Power source UL	Class 2 Supply
	Degree of protection IEC/EN	IP20
	Degree of protection NEMA/UL	NEMA 1
	Enclosure	UL Enclosure Type 1
	EMC	CE according to 2014/30/EU
	Certification IEC/EN	IEC/EN 60730-1 and IEC/EN 60730-2-14

Technical data

Safety data	UL Approval	cURus according to UL60730-1A, UL60730-2-14 and CAN/CSA E60730-1
	Hygiene test	According to VDI 6022 Part 1 / SWKI VA 104-01, cleanable and disinfectable, low emission
	Type of action	Type 1
	Rated impulse voltage supply / control	0.8 kV
	Pollution degree	2
	Ambient humidity	Max. 95% RH, non-condensing
	Ambient temperature	-30...50°C [-22...122°F]
	Storage temperature	-40...80°C [-40...176°F]
	Servicing	maintenance-free
Weight	Weight	0.15 kg

Safety notes

- This device has been designed for use in stationary heating, ventilation and air-conditioning systems and must not be used outside the specified field of application, especially in aircraft or in any other airborne means of transport.
- The device is not designed for applications where chemical influences (gases, fluids) are present or for utilisation in corrosive environments in general.
- The device is considered a component and intended for installation in an equipment at the factory. The required protection against accidental contact with live parts must be provided by the damper or system manufacturer.
- Only authorised specialists may carry out installation. All applicable legal or institutional installation regulations must be complied with during installation.
- The device may only be opened at the manufacturer's site. It does not contain any parts that can be replaced or repaired by the user.
- The plug connections may only be used according to the installation instructions. The Molex plug connection has a mandatory locking mechanism that prevents unintentional disconnection. Operating the locking mechanism and the entire plug connection under voltage is not permitted.
- To calculate the actuating force required for air dampers and slide valves, the specifications supplied by the damper manufacturers concerning the cross- section and the design, as well as the installation situation and the ventilation conditions must be observed.
- The device contains electrical and electronic components and must not be disposed of as household refuse. All locally valid regulations and requirements must be observed.

Product features

Operating mode
The actuator is connected with a standard control signal of 0...10 V and drives to the position defined by the control signal. Measuring voltage U serves for the electrical display of the damper position 0...100% and as control signal for other actuators.

Simple direct mounting
The actuator can be directly connected with the application using the enclosed screws. The head of the gear rod is connected to the moving part of the ventilation application individually on the mounting side.

High functional reliability
The actuator is overload protected, requires no limit switches and automatically stops when the end stop is reached.

Hidden synchronisation
If the actuator drives to the lower end stop during ongoing operation, it performs a synchronisation of the control signal at DC 2 V. This ensures that the signal range also corresponds to the effective functional range in ongoing operation. The bottom end stop is actively approached as soon as the control signal is <DC 2.1 V. The actuator drives to the new specified position as soon as the control signal is once again >DC 2.3 V.

Accessories

Mechanical accessories	Description	Type
	End stop clip, Multipack 20 pcs.	Z-ESUH
	Protective covering, Multipack 20 pcs.	Z-PCUM

Electrical installation

Supply from isolating transformer.

Parallel connection of other actuators possible. Observe the performance data.

Cable-side connector socket is not included in scope of delivery

The plug connections may only be used according to the installation instructions. The Molex plug connection has a mandatory locking mechanism that prevents unintentional disconnection. Operating the locking mechanism and the entire plug connection under voltage is not permitted.

Wiring diagrams

AC/DC 24 V, modulating

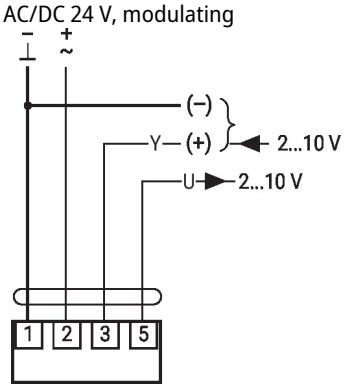

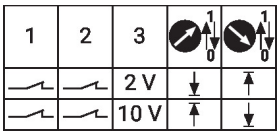

Molex PN 39014040 / 39000039 (0.5...1.0 mm²)

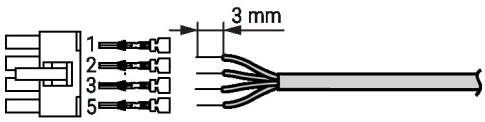

Installation notes

Applications without transverse forces

The linear actuator is screwed directly to the housing at two points. Afterwards, the head of the gear rod is fastened to the moving part of the ventilation application (e.g. damper or slide valve).

Dimensions

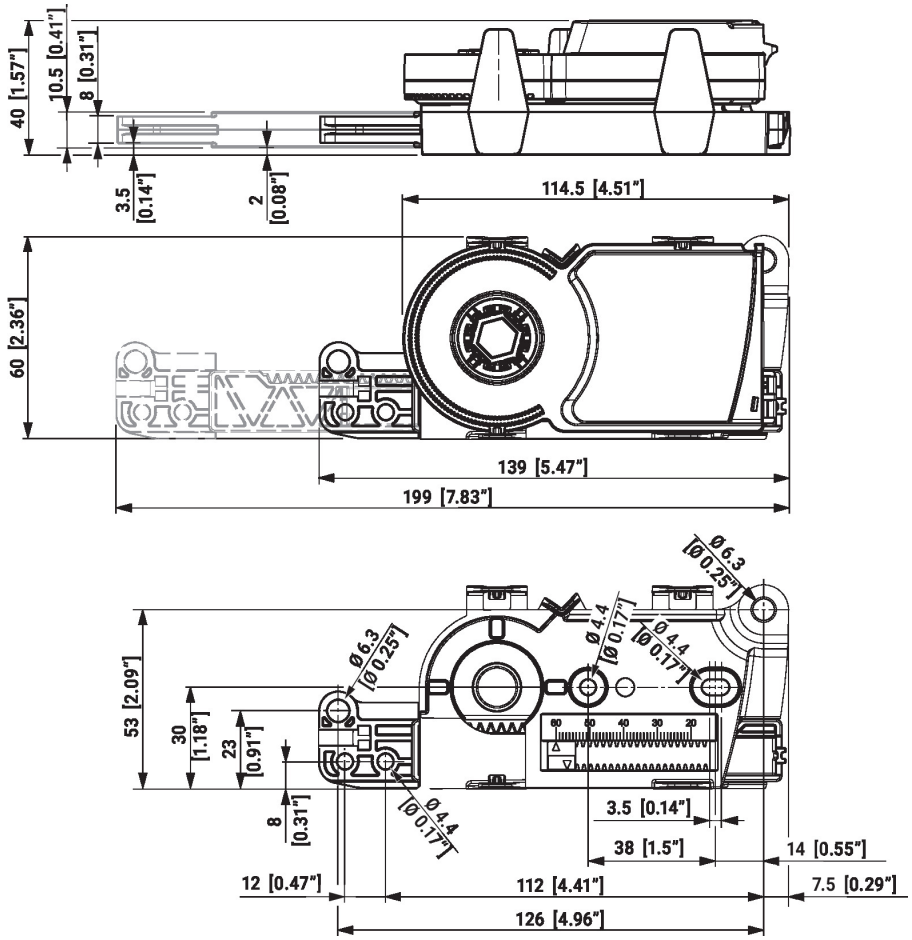
40 [1.57"]
10.5 [0.41"]
8 [0.31"]
3.5 [0.14"]
2 [0.08"]
114.5 [4.51"]
60 [2.36"]
139 [5.47"]
199 [7.83"]
Ø 6.3 [Ø 0.25"]
Ø 4.4 [Ø 0.17"]
53 [2.09"]
30 [1.18"]
23 [0.91"]
8 [0.31"]
3.5 [0.14"]
38 [1.5"]
14 [0.55"]
12 [0.47"]
112 [4.41"]
7.5 [0.29"]
126 [4.96"]