Mounting kit for linkage operation

• for side installation

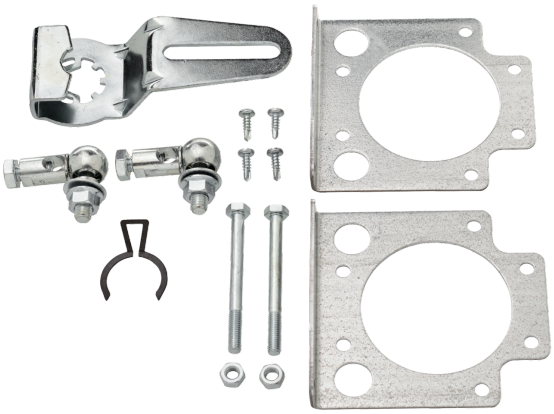

Picture may differ from product

Technical data

Weight	Weight	0.47 kg
Materials	Used materials	Galvanised steel

Safety notes

- This accessory has been designed for use in stationary heating, ventilation and air-conditioning systems and must not be used outside the specified field of application, especially in aircraft or in any other airborne means of transport.
- Only authorised specialists may carry out installation. All applicable legal or institutional installation regulations must be complied with during installation.
- The accessory may not be disposed of as household refuse. All locally valid regulations and requirements must be observed.

Product features

Application Suitable for LF..

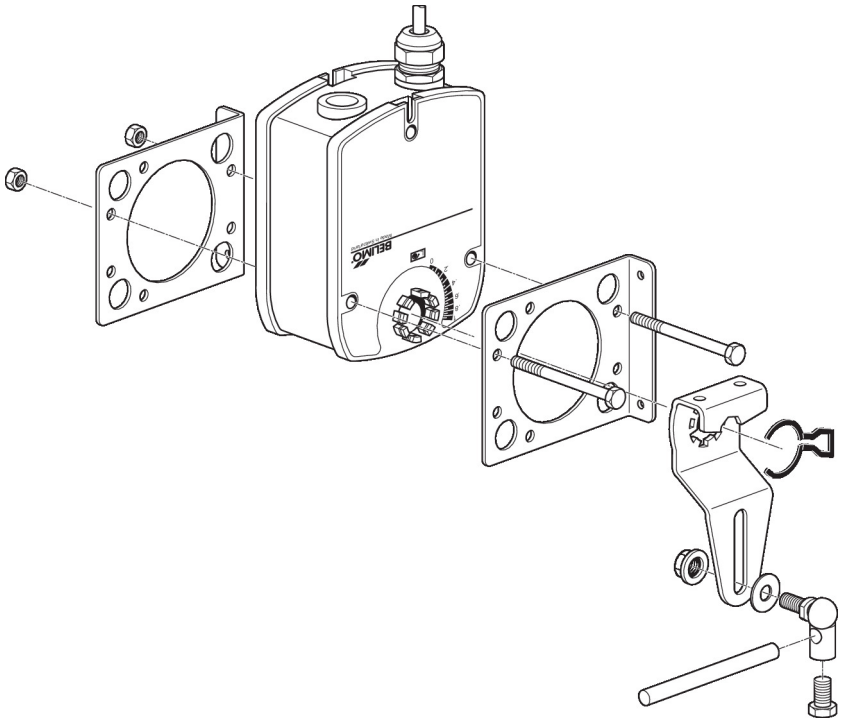

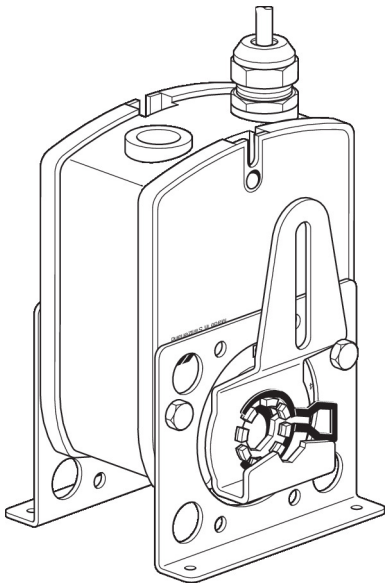

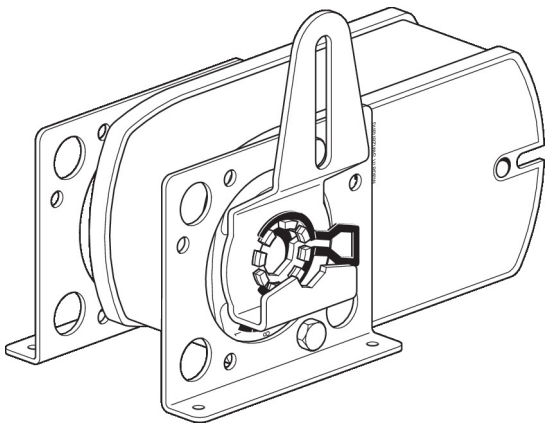

Dimensions

Type	Weight
ZG-LF3	0.47 kg