Damper actuator for adjusting dampers in technical building installations

- Torque motor 40 Nm
- Nominal voltage AC/DC 24 V
- Control Open/close, 3-point
- Running time motor 150 s (90...150 s)
- With pluggable connecting cable

GM24-C2

Picture may differ from product

## Technical data

| | | |
|---|---|---|
| **Electrical data** | Nominal voltage | AC/DC 24 V |
| | Nominal voltage frequency | 50/60 Hz |
| | Nominal voltage range | AC 19.2...28.8 V / DC 19.2...28.8 V |
| | Power consumption in operation | 2 W |
| | Power consumption in rest position | 0.2 W |
| | Power consumption for wire sizing | 5 VA |
| | Connection supply / control | Cable FRNC (halogen-free) 1 m 3x 0.5 $mm^2$ [21 AWG] |
| | Parallel operation | See Electrical Installation or contact your local Belimo representative |
| **Functional data** | Torque motor | 40 Nm |
| | Direction of motion motor | clockwise rotation (cw) |
| | Direction of motion note | selectable with Belimo Assistant 2 |
| | Manual override | with lateral lever, can be locked |
| | Angle of rotation | Max. 95° |
| | Angle of rotation note | can be electronically limited on both sides with Belimo Assistant 2 |
| | Running time motor | 150 s / 90° |
| | Running time motor variable | 90...150 s |
| | Sound power level, motor | 40 dB(A) |
| | Mechanical interface | Universal shaft clamp reversible 12...26.7 mm |
| | Position indication | Mechanical |
| **Safety data** | Protection class IEC/EN | III, Protective Extra-Low Voltage (PELV) |
| | Degree of protection IEC/EN | IP54 |
| | EMC | CE according to 2014/30/EU |
| | Certification IEC/EN | IEC/EN 60730-1 and IEC/EN 60730-2-14 |
| | Type of action | Type 1 |
| | Rated impulse voltage supply / control | 0.8 kV |
| | Pollution degree | 3 |
| | Environmental conditions operation | Class 3K23 according to IEC 60721-3-3 |
| | Ambient humidity | Max. 95% RH, non-condensing |
| | Ambient temperature | -30...55°C [-22...131°F] |
| | Ambient temperature note | up to 60°C [140°F], max. 2 h/day |
| | Environmental conditions transport | Class 2K11 according to IEC 60721-3-2 |
| | Environmental conditions storage | Class 1K21 according to IEC 60721-3-1 |
| | Storage temperature | -30...55°C [-22...131°F] |
| | Servicing | maintenance-free |

## Technical data

| | | |
|---|---|---|
| **Weight** | Weight | 1.6 kg |

## Safety notes

- This device has been designed for use in stationary heating, ventilation and air-conditioning systems and must not be used outside the specified field of application, especially in aircraft or in any other airborne means of transport.
- Outdoor application: Only possible if no (sea) water, snow, ice, sunlight or aggressive gases act directly on the device and if it is ensured that the ambient conditions remain within the limit values specified in the data sheet at all times.
- Only authorised specialists may carry out installation. All applicable legal or institutional installation regulations must be complied with during installation.
- The device may only be opened at the manufacturer's site. It does not contain any parts that can be replaced or repaired by the user.
- To calculate the torque required, the specifications supplied by the damper manufacturers concerning the cross-section and the design, as well as the installation situation and the ventilation conditions must be observed.
- The device contains electrical and electronic components and must not be disposed of as household refuse. All locally valid regulations and requirements must be observed.

## Product features

**Visual status display**
The device indicates its operation by means of a green LED.

**Configurable device**
The factory settings cover the most common applications.

Parameters can be modified using Belimo Assistant 2, either wirelessly via Near Field Communication (NFC), or via a wired connection.

**Simple direct mounting**
Simple direct mounting on the damper shaft with a universal shaft clamp, supplied with an anti-rotation mechanism to prevent the actuator from rotating.

**Manual override**
Manual override possible with lateral lever (the gear train is disengaged for as long as the lever is actuated or remains locked).

Manual override with stationary actuator is used for installation, commissioning and maintenance of the application.

**Adjustable angle of rotation**
Adjustable angle of rotation with electrical end stops. The setting of the control range (Min - Max) is made with Belimo Assistant 2.

**High functional reliability**
The actuator is overload protected, requires no limit switches and automatically stops when the end stop is reached.

**Innovative motorisation**
The actuator uses the powerful Belimo M600 microchip in combination with the INFORM method. It provides the full starting torque from a standstill with high precision (sensorless INFORM-Drive by Prof. Schrödl).

**Connection**
The cable can be plugged in and unplugged from the device.

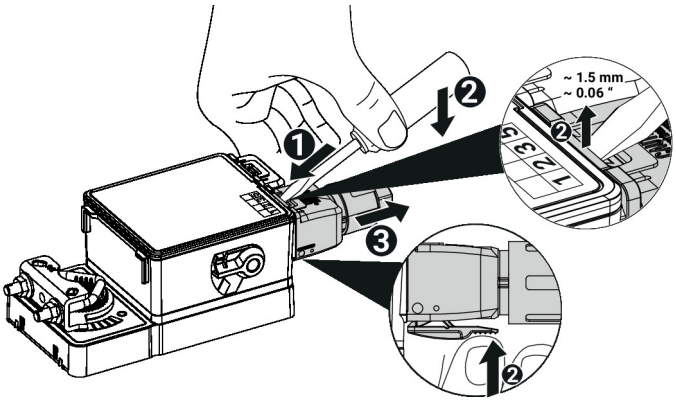

## Accessories

| Tools | Description | Type |
|---|---|---|
| | Service tool for wired and wireless setup, on-site operation and troubleshooting. | Belimo Assistant 2 |
| | Belimo Assistant Link Bluetooth and USB to NFC and MP-Bus converter for configurable and communicative devices | LINK.10 |
| | Connecting cable 5 m, A: RJ11 6/4 LINK.10, B: free wire end for connection to MP/PP terminal | ZK2-GEN |

| Electrical accessories | Description | Type |
|---|---|---|
| | Connecting cable for 24 V applications, 1 m FRNC (halogen-free), 3x 0.5 mm²/20 AWG | A.EISC.13 |
| | Connecting terminal compl. IP65 for 24 V applications | A.EIST.10 |
| | Cable conduit connector, M20 | S.EISCC.11 |
| | Cable conduit connector, 1/2" NPT | S.EISCC.10 |
| | Blanking plug | S.EISBP.10 |

| Mechanical accessories | Description | Type |
|---|---|---|
| | Actuator arm for standard shaft clamp | AH-GMA |
| | Ball joint suitable for damper crank arm KH8 / KH10 | KG10A |
| | Damper crank arm Slot width 8.2 mm, clamping range ø14...25 mm | KH10 |
| | Anti-rotation mechanism 230 mm, Multipack 20 pcs. | Z-ARS230 |
| | Mounting kit for linkage operation for flat installation | ZG-GMA |
| | Position indicator | S.MISPI.10 |

## Electrical installation

**Supply from isolating transformer.**

**Actuators may be connected in parallel if not mechanically linked. Power consumption and input impedance must be observed.**

**The cable cross-section (mm²) must be determined on the basis of the actuator performance data (VA, W), the cable resistance, the number of actuators, and the total cable length according to electrotechnical principles. High voltage drops across the installation cables can affect the function of the actuator if, for example, the nominal voltage range (AC/DC) is not respected.**

**Wire colours:**
1 = black
2 = red
3 = white

AC/DC 24 V, open/close

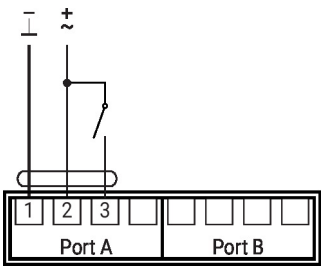


AC/DC 24 V, 3-point

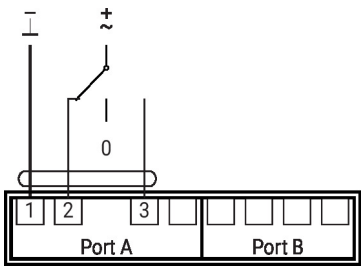


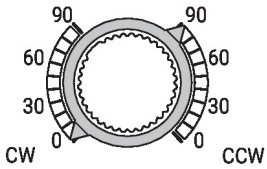


| 1 | 2 | 3 | cw | ccw |
|---|---|---|---|---|
| | | | 0° | 90° |
| | | | 90° | 0° |
| | | | 90° | 0° |

## Operating controls and indicators

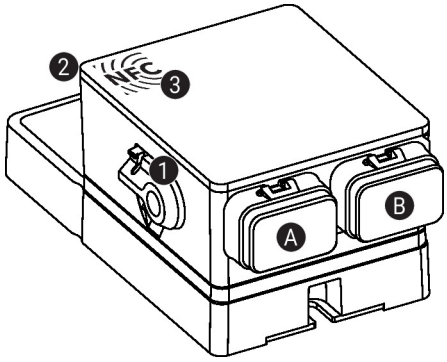


1. **Manual override lever**
   Rotate lever counterclockwise to end position:
   - Gear train disengages, manual override possible

   Return lever clockwise to starting position:
   - Gear train engages, followed by standard mode

2. **Status display, LED green**

| | |
|---|---|
| LED on: | operation OK |
| LED flashing: | Connect device with Belimo Assistant 2 for additional information |
| LED off: | No power supply |

3. **NFC interface**

A. **Port A**, see Electrical Installation

B. **Port B**, see Electrical Installation

## Service

Using Belimo Assistant 2, device parameters can be modified. Belimo Assistant 2 can operate on a smartphone, tablet or PC. The available connection options vary depending on the hardware on which Belimo Assistant 2 is installed.

For more information about Belimo Assistant 2, refer to the Quick Guide – Belimo Assistant 2.

**Wireless connection**

Belimo devices marked with the NFC logo can be accessed either directly with an NFC-capable smartphone or with a Bluetooth-capable smartphone connected to Belimo Assistant Link or ZIP-BT-NFC.

Align the NFC-capable smartphone or Belimo Assistant Link with the device's NFC logo so that both NFC antennas are superposed.

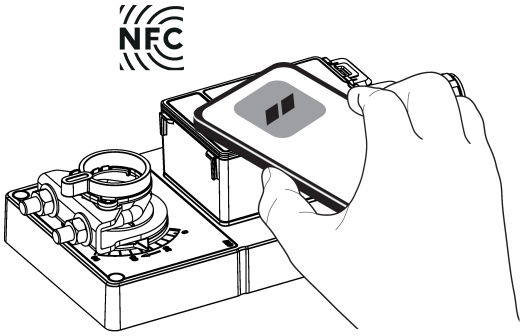


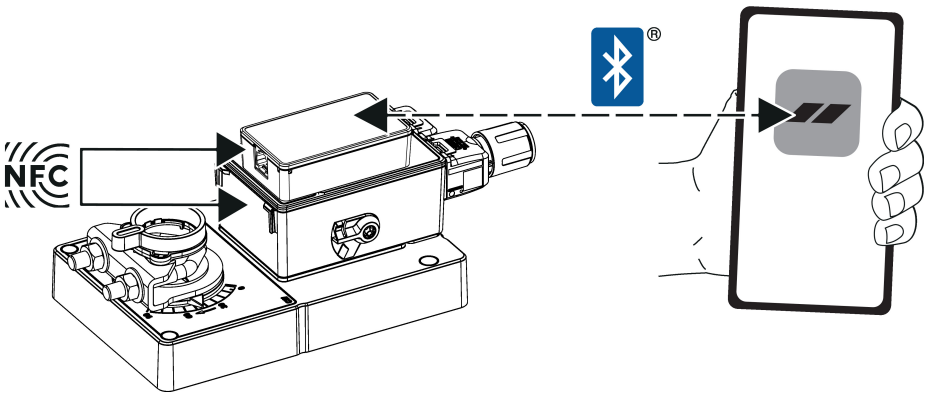

## Service

**Wired connection**

Belimo devices can be accessed by connecting Belimo Assistant Link to the USB port on a PC or laptop and to the service socket or MP-Bus wire on the device.

Belimo Assistant 2 acts as MP client. Therefore, no other MP client shall be connected to the device.

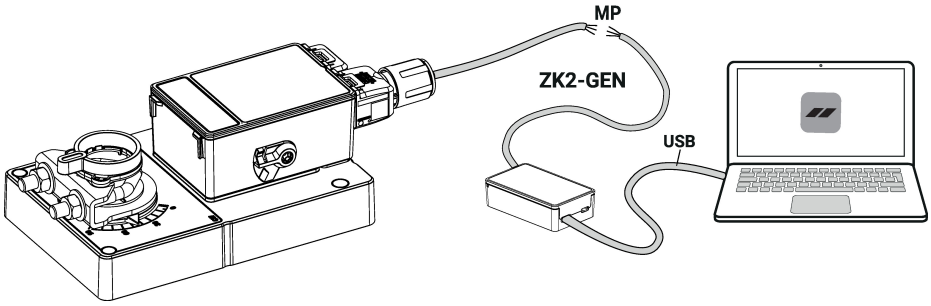


## Dimensions

### Shaft length

| | |
|---|---|
| 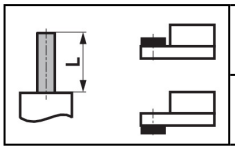 | Min. 52 mm [2.05"] |
| | Min. 20 mm [0.75"] |

### Clamping range

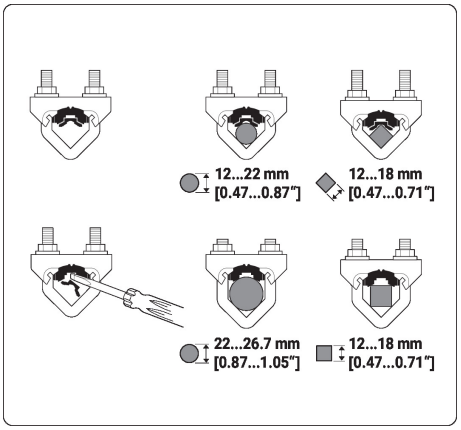


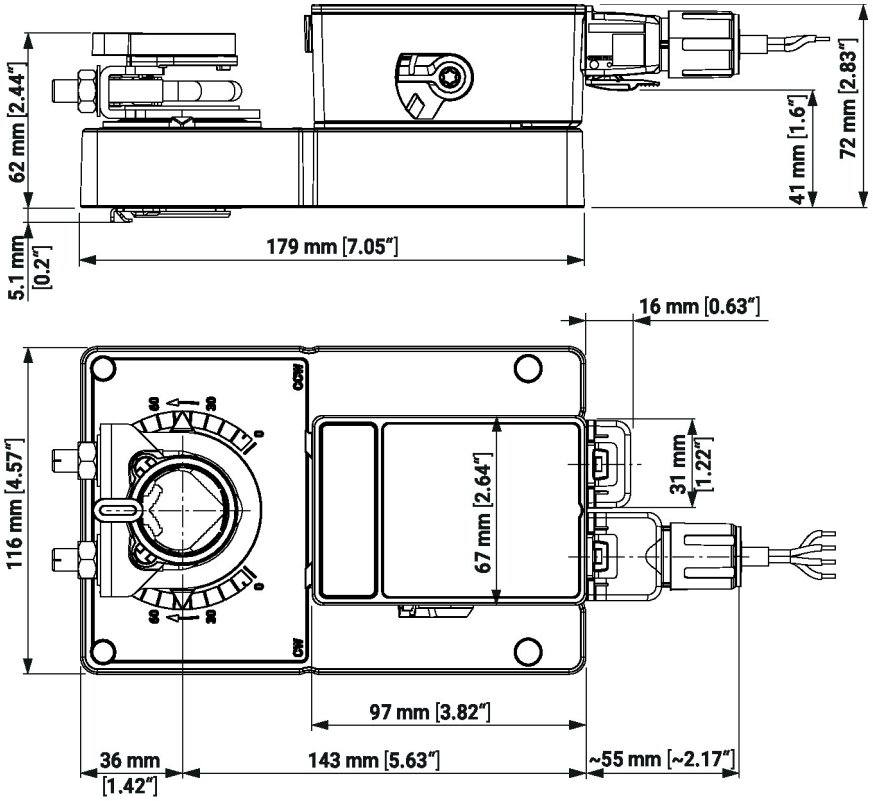


## Further documentation

- Quick Guide – Belimo Assistant 2